厦杏摩托
SANYANG MOTOR

零件目錄
PARTS CATALOGUE

TEA25T1CN-TRC(ZJ1/ ADXTG)

□內銷　□自接單外銷　☑三角貿易

時間：2026-01-14

ODEL	TEA25T1CN-TRC(ZJ1/ ADXTG)
ATE	
ASIC COLOR	

作成	确认	承认

	COLOR CODE		GY-7547UL	GY-008C	BK-2593U	BK-007U	WH-006U
	Description	STOK KODU	AQ	AR	AT	KC	WF
1	EXH MUFFLER	18000-ZJ1-000	K	K	K	K	K
2	RR. CASE WHEEL COMP.	42601-J01-000	K	K	K	K	K
3	RR BRAKE DISK	43121-L3A-900	K	K	K	K	K
4	FR. WHEEL SUB	44600-J01-000	K	K	K	K	K
5	FR. BRAKE DISK	45121-L9F-000	SB	SB	SB	SB	SB
6	BRAKE SYSTEM ASS'Y	4500A-ZM1-000	K	K	K	K	K
7	R. STEP BAR SET	5071A-XTF-000	SB	SB	SB	SB	SB
8	L. STEP BAR COMP.	5071B-XTF-000	SB	SB	SB	SB	SB
9	FR.R CUSHION	51400-ZM1-900	K	K	K	K	K
10	FR/L CUSHION	51500-ZM1-900	K	K	K	K	K
11	RR. FORK	5210A-ZM1-000	K	K	K	K	K
12	RR CUSHION	52400-ZM1-000	K	K	K	K	K
13	STRG. HANDLE COMP.	53100-ZM1-000	S1	S1	S1	S1	S1
14	HNDL. PIPE UP. HOLDER	53131-ZM1-000	S1	S1	S1	S1	S1
15	R.HANDLE PIPE LWR.HOLDER	53132-ZM1-000	S1	S1	S1	S1	S1
16	L.HANDLE PIPE LWR.HOLDER	53133-ZM1-000	S1	S1	S1	S1	S1
17	WIND SCREEN	67100-ZM1-000	K	K	K	K	K
18	RH. WIND SCREEN STAY	67101-ZHA-000	SV	SV	SV	SV	SV
19	LH. WIND SCREEN STAY	67102-ZHA-000	SV	SV	SV	SV	SV
20	DOUBLE SEAT	77200-ZM1-000	T1	T1	T1	T1	T1
21	RR.CARRIER	81200-ZJ1-000	AE	AE	AE	AE	AE
22	FR. HANDLE COVER	53205-ZM1-000	S1	S1	S1	S1	S1
23	R.HANDLE LWR.COVER GARNISH A	53211-ZM1-000	S1	S1	S1	S1	S1
24	L.HANDLE LWR.COVER GARNISH A	53212-ZM1-000	S1	S1	S1	S1	S1
25	HANDLE LWR.COVER GARNISH B	53213-ZM1-000	S1	S1	S1	S1	S1
26	FR. FENDER	61100-ZM1-000	AQ	AR	AT	KC	WF
27	FRONT COVER	64301-ZM1-000	AQ	AR	AT	KC	WF
28	R.FRONT DOWN COVER GARNISH A	64303-ZM1-000	AE	AE	AT	AE	AE

29	L.FRONT DOWN COVER GARNISH A	64304-ZM1-000	AE	AE	AT	AE	AE
30	FRONT DOWN COVER	64305-ZM1-000	K	K	K	K	K
31	R.FRONT COVER	64306-ZM1-000	AQ	AR	AT	KC	WF
32	L.FRONT COVER	64307-ZM1-000	AQ	AR	AT	KC	WF
33	R.FLOOR PANEL GARNISH	64330-ZM1-000	SB	SB	SB	SB	SB
34	L.FLOOR PANEL GARNISH	64340-ZM1-000	SB	SB	SB	SB	SB
35	RR.FENDER GARNISH	80103-ZM1-000	SB	SB	SB	SB	SB
36	MAIN SW.COVER	81132-ZM1-000	AQ	AR	AT	KC	WF
37	R.BODY COVER	83500-ZM1-000	AQ	AR	AT	KC	WF
38	R.FR.BODY COVER	83510-ZM1-000	AE	AE	AT	AE	AE
39	L.BODY COVER	83600-ZM1-000	AQ	AR	AT	KC	WF
40	L.FR.BODY COVER	83610-ZM1-000	AE	AE	AT	AE	AE
41	R.FR.COVER EMBLEM	87123-ZJ1-000	●	●	●	●	●
42	L.FR.COVER EMBLEM	87124-ZJ1-000	●	●	●	●	●
43	BODY COVER EMBLEM	87128-ZHE-000	●	●	●	●	●
44	TCS STRIPE	87160-XTH-000	●	●	●	●	●
45	RR. EMBLEM	88200-BBC-000	●	●	●	●	●

引擎部品目錄

CONTENTS-ENGINE GROUP

E01	水泵總成	E02	汽缸頭	E03	水管
WATER PUMP		CYLINDER HEAD		WATER HOSE	
E04	通氣管 &回收器	E05	凸輪軸 &汽缸頭蓋	E06	右曲軸箱 & 油泵總成
BREATHER TUBE & BREATHER CHAMBER COMP		CAM SHAFT &CYLINDER HEAD COVER		R CARNK CASE & OIL PUMP ASSY	
E07	汽缸	E08	右曲軸箱蓋	E09	交流電機
CYLINDER		R. CRANK CASE COVER		AC GEN. ASSY	

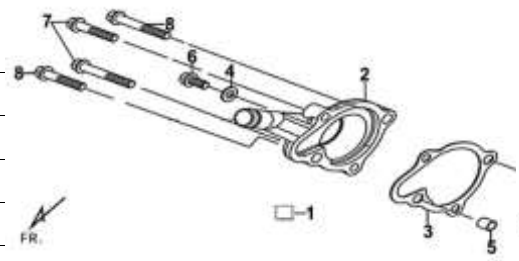

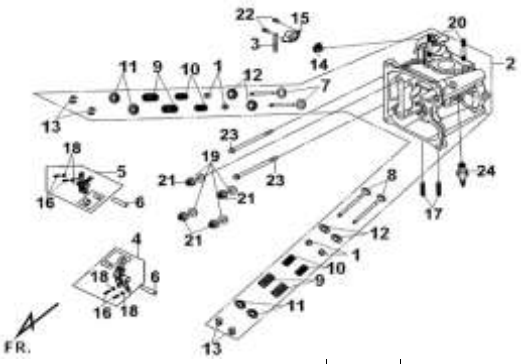

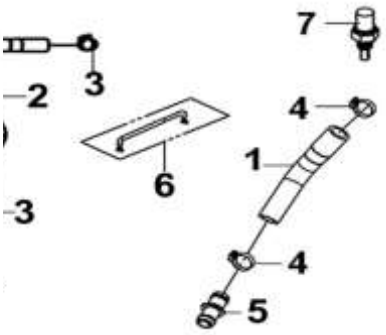

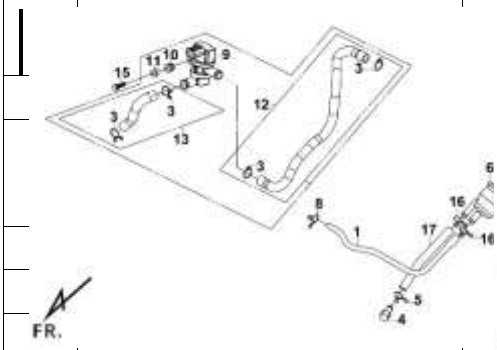

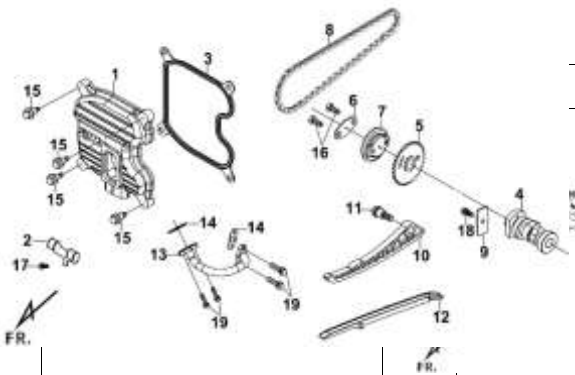

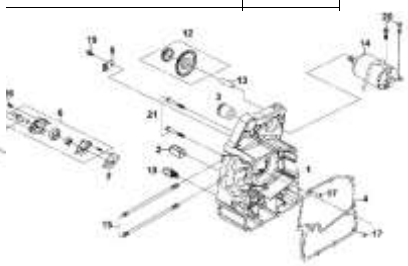

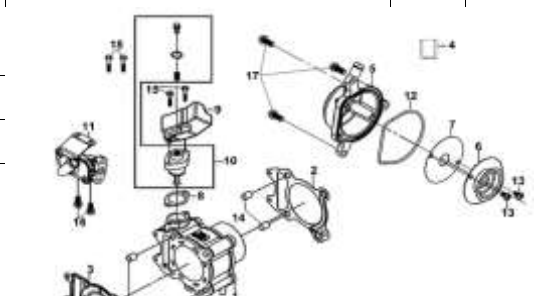

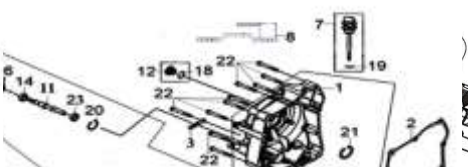

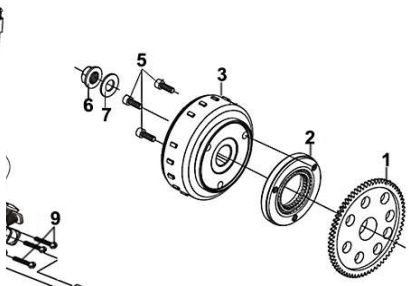

E10	**左曲軸箱蓋**	**E11**	**滑動驅動盤總成**	**E12**	**驅動盤總成**	
L. CRANK CASE COVER		**MOVABLE DRIVE FACE ASSY**		**DRIVEN PULLEY ASSY**		

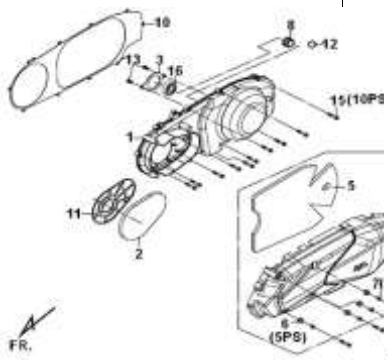

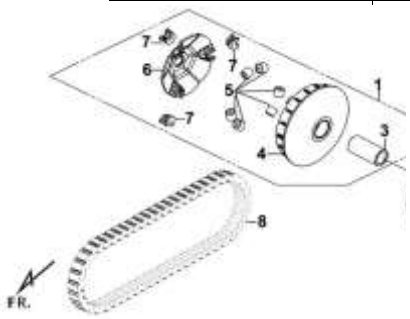

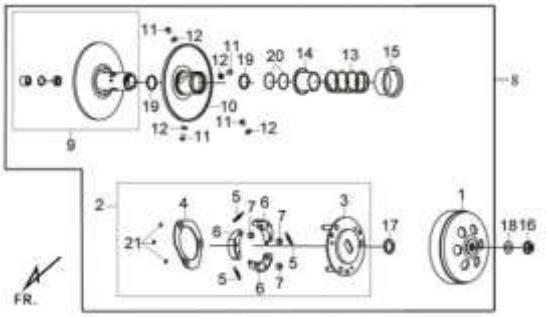

E13	**變速箱 & 驅動軸**	**E14**	**左曲軸箱**	**E15**	**曲軸**
MISSION CASE & DRIVE SHAFT		**L. CRANK CASE**		**CRANK SHAFT**	

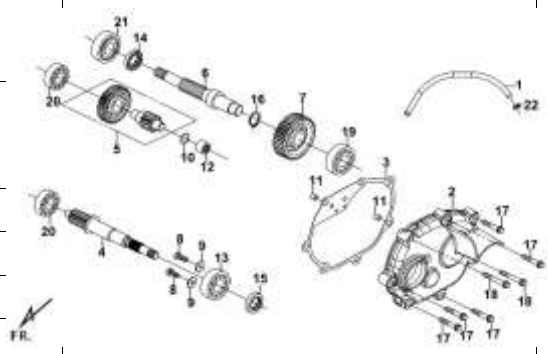

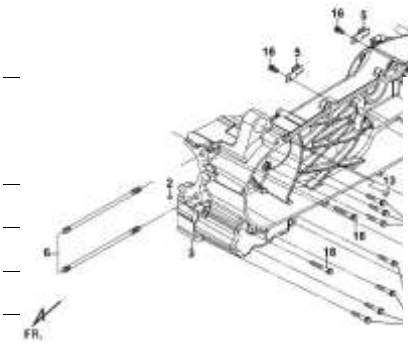

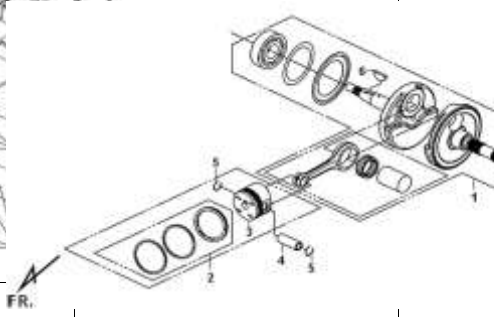

E16	**ECU總成**	**E17**	**空濾器**	**E18**	**排氣管**
ECU SET		**AIR CLEANER**		**EXHAUST MUFFLER**	

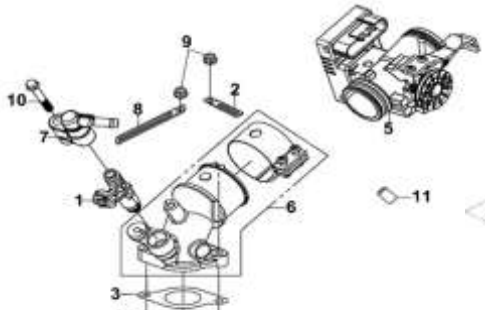



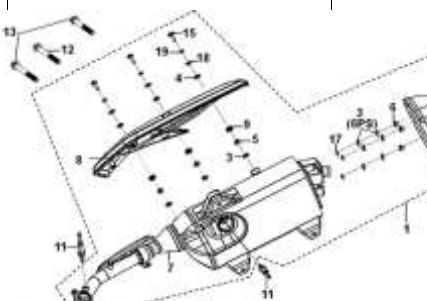

車架部品目錄

CONTENTS-FRAME GROUP

F01	把手蓋 & 儀錶	F02	風鏡	F03	方向把手
HANDLE COVER & METER		WIND SCREEN		STRG. HANDLE	
F04	ABS總成	F05	前面板	F06	前內蓋
ABS ASSY		FRONT COVER		FRONT INNER BOX	
F07	中央蓋	F08	轉向主幹&前避震器	F09	前擋泥板
MAIN SW.COVER		STEERING STEM & FRONT CUSHION		FR. FENDER	

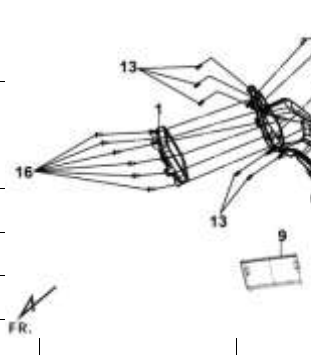

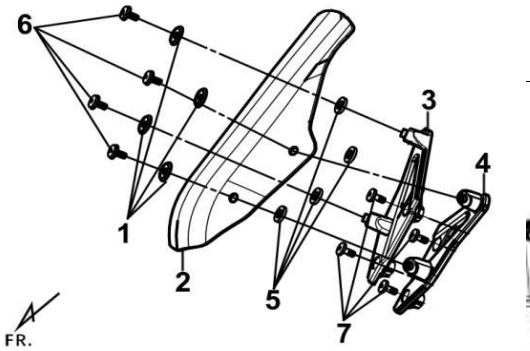

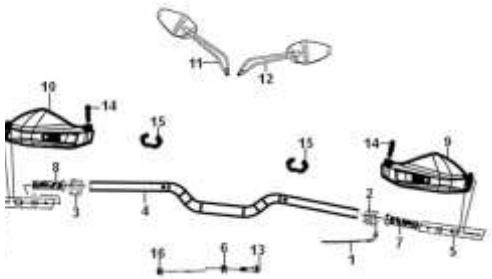

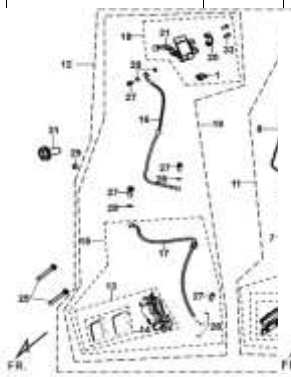

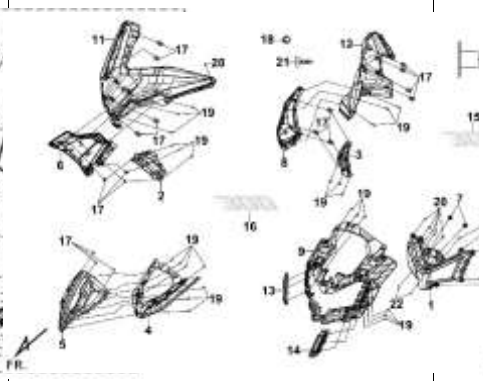

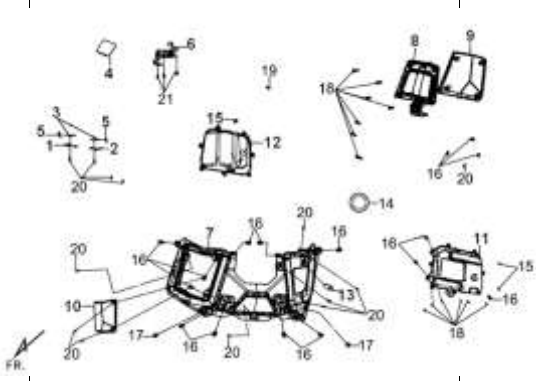

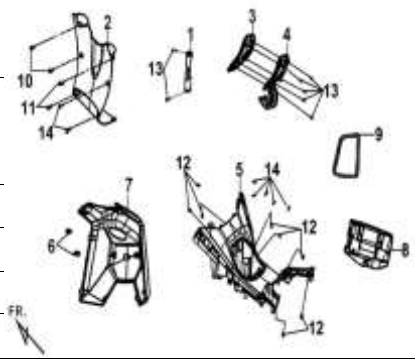

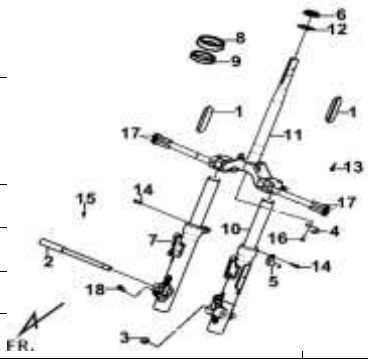

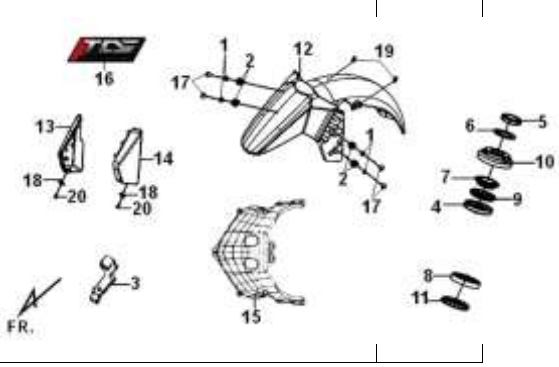

F10	**前輪**	**F11**	**腳踏板 & 邊條蓋**	**F12**	**主腳架 & 側腳架**	
FRONT WHEEL		**FLOOR PANEL & SIDE COVER**		**MAIN STAND & SIDE STAND**		

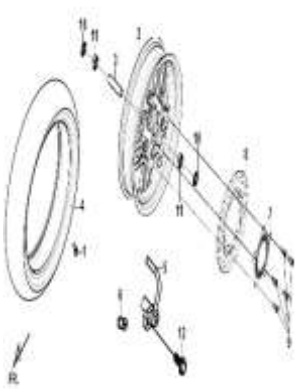

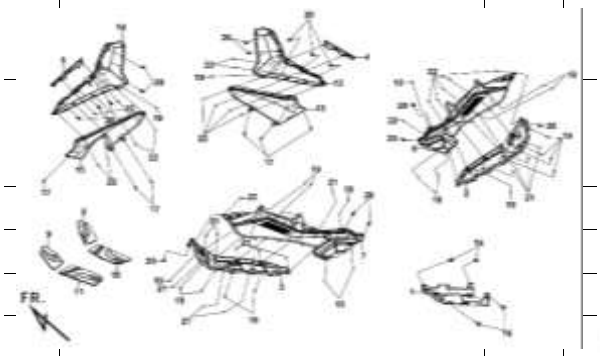

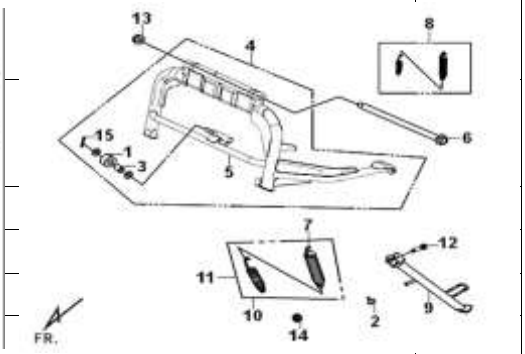

REAR WHEEL & REAR FORK		**RR.MUDGUARD & RR. CUSHION**		**RR. WINKER & RR. FENDER**		
F16	**車體蓋 & 尾燈**	**F17**	**座墊 & 置物箱 &後扶手**	**F18**	**加油口 & 油箱**	
BODY COVER & TAIL LIGHT		**SEAT & LUGGAGE BOX & REAR CARRIER**		**FILLER PIPE & FUEL TANK**		

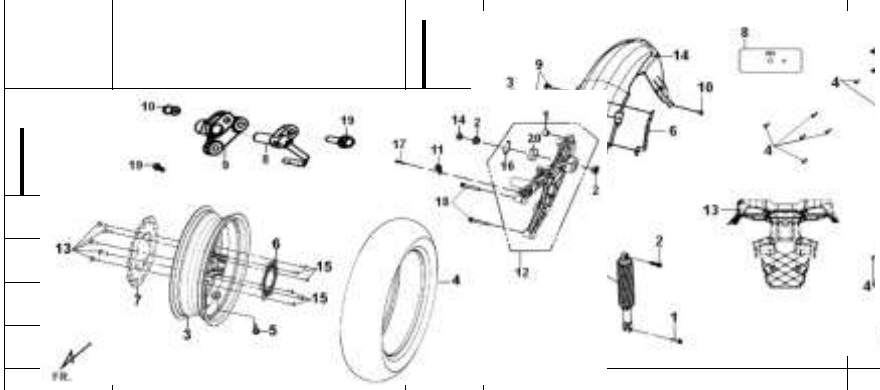

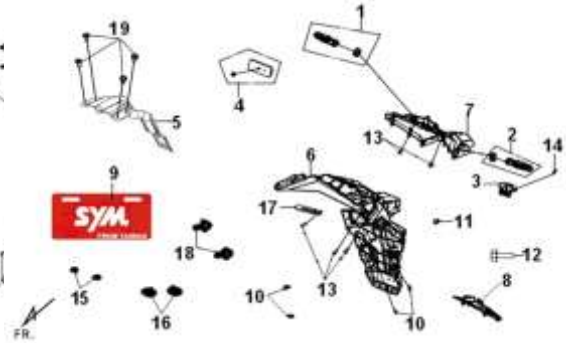

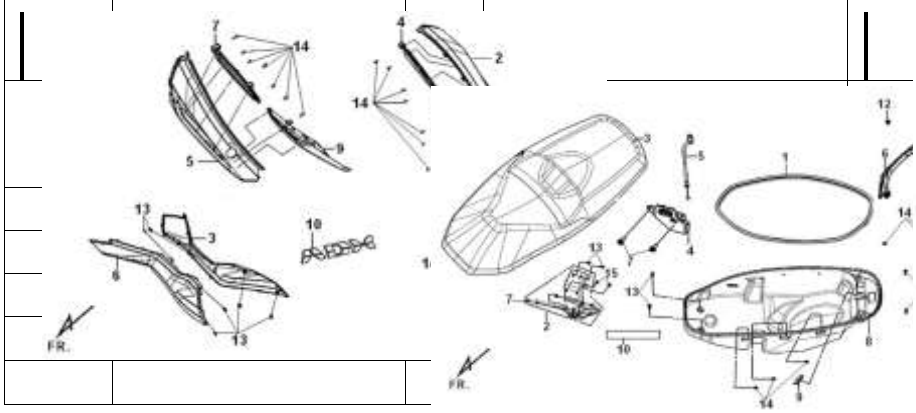

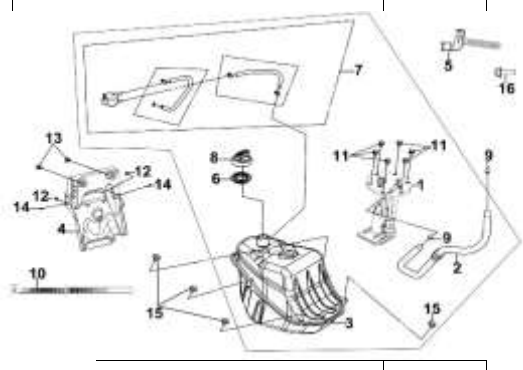

F19	**電瓶 & 工具包**	**F20**	**主線路 & 碳罐**	**F21**	**電裝元件**	
BATTERY & TOOL BOX		**WIRE HARNESS & CANISTER**		**ELECTRICAL COMPONENT**		
F22	**車架**	**F23**	**副水箱 & 引擎懸吊**			
FRAME BODY		**RESERVE TANK & ENGINE HANGER**				

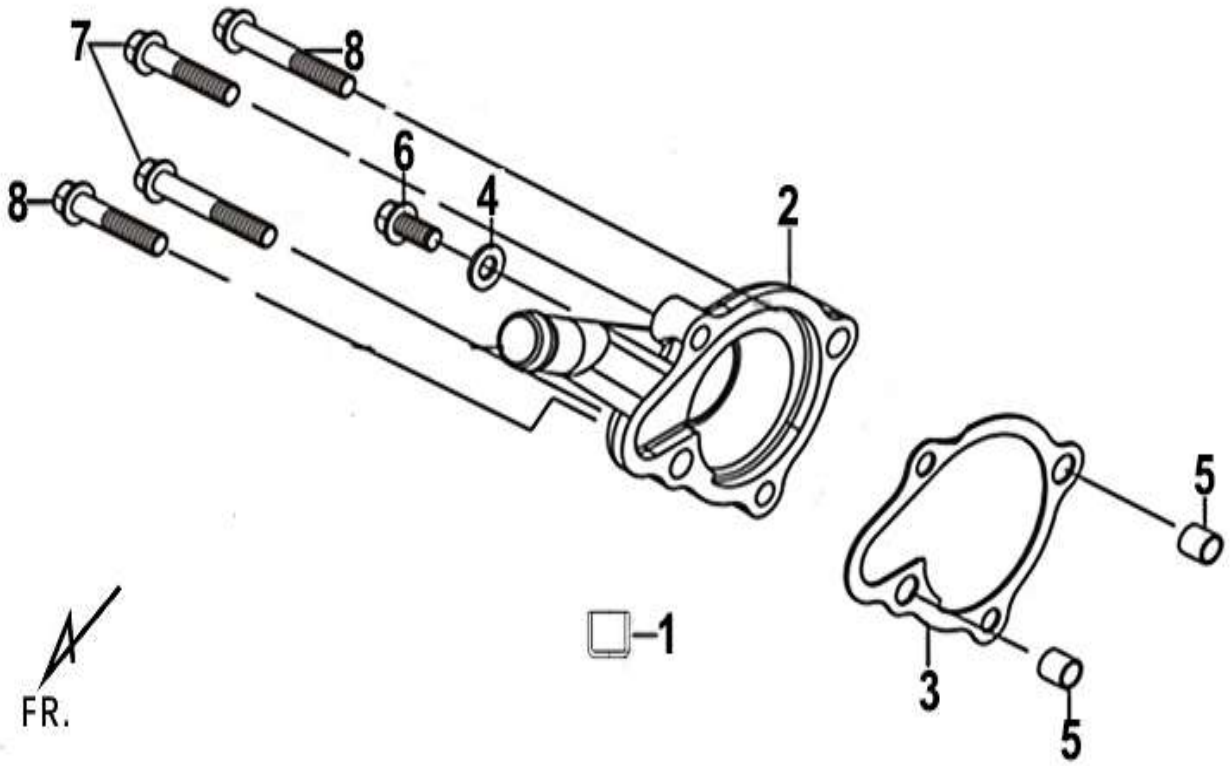

E01		TEA25T1CN-TRC(ZJ1/ ADXTG)	
SU POMPASI			
NO	STOK KODU	ACIKLAMA	ADET
01	12306-MA2-000	HAVALANDIRMA BAGLANTI KAPAGI	1
02	19220-LEA-000	RADYATOR SU POMPASI DEVIRDAIM KAPAGI ADET.	1
03	19229-H9A-000	CONTASI DEVIRDAIM SU POMPASI CONTASI_(19229-H9A-002)	1
04	90478-700-000	ORINGPUL 6MM RADYATOR SU POMPASI PULU	1
05	94301-08140	PIMI KRANK PIMI M8*8*14 PIMI	2
06	96001-06010-00	CIVATA M6*10 SU POMPASI KAPAGI CIVATASI	1
07	96001-06022-02	CIVATA M6*22 SU POMPASI KAPAGI CIVATASI	2
08	96001-06032-02	CIVATA M6*320 SU POMPASI KAPAGI CIVATASI	2

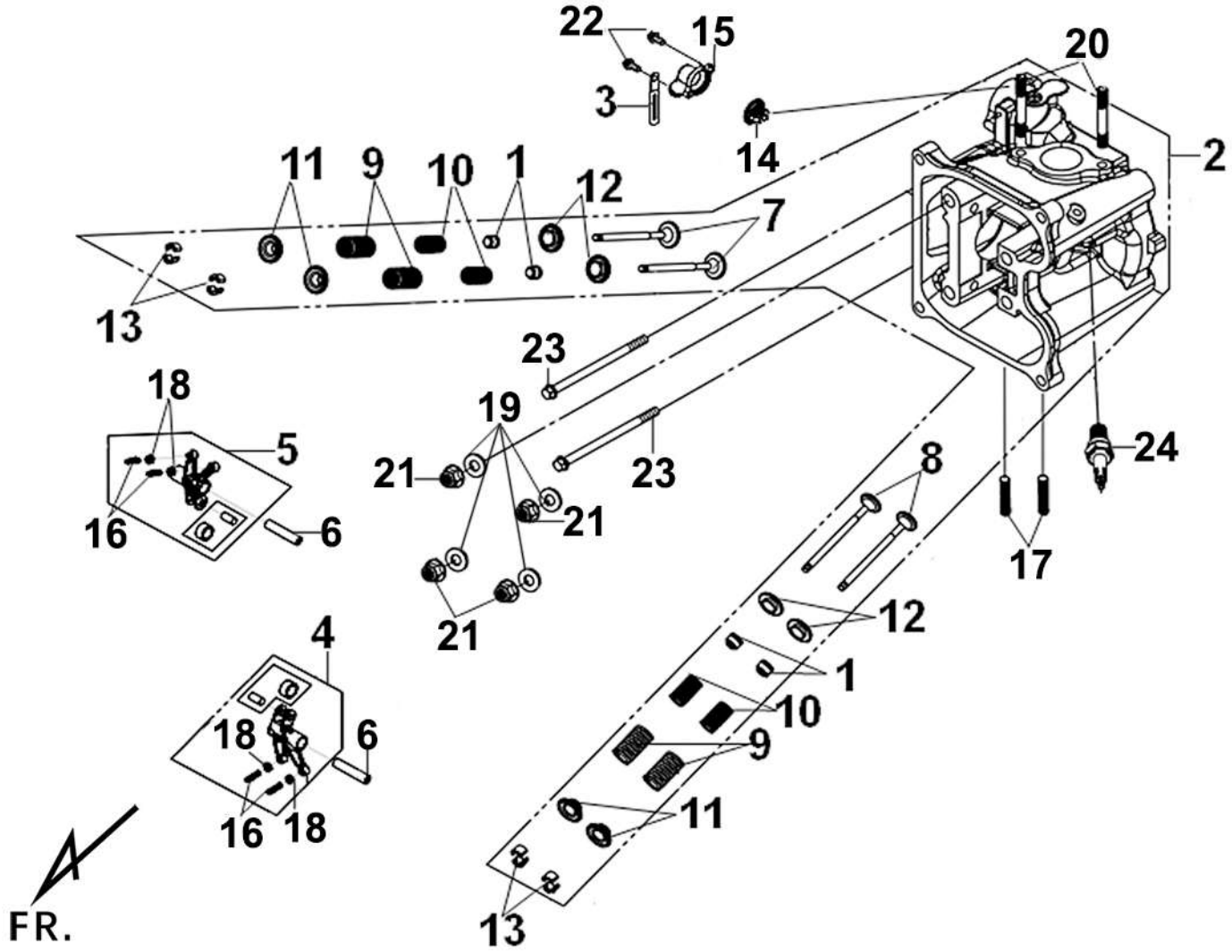

E02		TEA25T1CN-TRC(ZJ1/ ADXTG)	
SILINDIR UST KAPAGI - SUBAPLAR			
NO	STOK KODU	ACIKLAMA	ADET
01	12209-H6B-900	KECE OZEL SUBAP KECESI_(12209-H6B-900-M2)	4
02	1220C-XTA-000	SILINDIR KAPAGI UST KAFA ADET.	1
03	12342-X01-000	KELEPCE TANSIYONER UST KELEPCESI	1
04	1443A-J01-000	SUBAP PIYANO CEKIC EMME	1
05	1444A-J01-000	SUBAP PIYANO CEKIC EGSOZ	1
06	14451-XTA-000	SUBAP PIYANO CEKIC MILI EMME	2
07	14711-HMA-000	SUBAP EMME SUBABI INLET VALVE	2
08	14721-RFS-000	SUBAP EGSOZ SUBABI EXHAUST VALVE_(14721-HMA-000)	2
09	14751-XTA-000	YAYI SUBAP DIS YAYI	4
10	14761-HMA-000	YAYI SUBAP IC YAYI	4
11	14771-M8Q-000	YAYI SUBAP TIRNAK TUTUCU	4
12	14777-M8Q-000	PULU YAYI SUBAP YATAK	4
13	14781-A01-A00-A	SUBAP TIRNAGI_(14781-A01-A00-A)	2

14	19300-MA1-000-CN1	RADYATOR TERMOSTAT	1	
15	19315-L3A-010	RADYATOR TERMOSTAT KUTUSU KAPAGI	1	
16	90012-MB1-000	CIVATA IN/SUBAP VALVE CIVATASI	2	
17	90034-HMA-000	CIVATA M8*40 SILINDIR KAPAGI UST KAFA CIVATASI	2	
18	90206-HLK-000	SOMUN SUBAP AYAR IN/SUBAP VALVE SOMUNU_(90206-M9Q-000)	2	
19	90442-HMA-000	ORINGPUL 10_5MM SILINDIR KAPAGI PULU	4	
20	92900-06030-0B	CIVATA M2_6*30 SILINDIR KAPAGI CIVATASI ADET_(PKT5)_E02 19_MD_ADX300	2	
21	94050-10080	SOMUN 10MM SILINDIR KAPAGI UST KAFA SOMUNU	4	
22	96001-06016-02	CIVATA M6*16 ECU ENJKSIONN SIST CIVATASI_(96001-06016-00)	2	
23	96001-06090-02	CIVATA M6*90 SILINDIR CIVATASI	2	
24	98059-58817-00	ATESLEME NGK BUJI CR8	1	

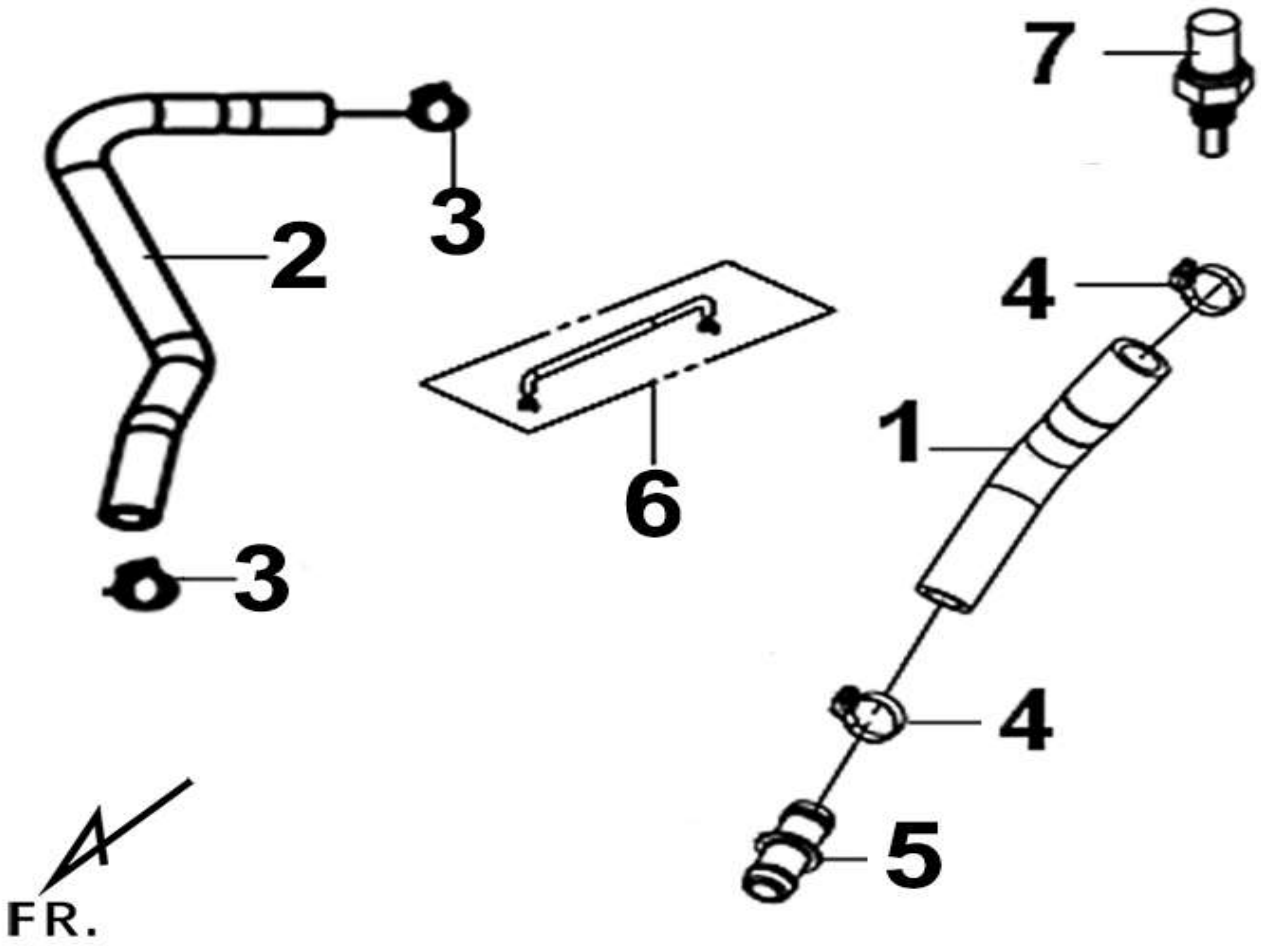

E03		TEA25T1CN-TRC(ZJ1/ ADXTG)	
SU HORTUMU			
NO	STOK KODU	ACIKLAMA	ADET

01	19502-LH1-000	HORTUM RADYATOR TERMOSTAT SU HORTUM	1	
02	19502-ZM1-000	RADYATOR TERMOSTAT SU HORTUM	1	
03	19505-KS6-700	KELEPCE RADYATOR BAGLANTI HORTUMU KELEPCESI_(19505-M8Q-000)	2	
04	19505-REA-000-TW	KELEPCE RADYATOR BAGLANTI HORTUMU KELEPCESI	2	
05	19509-HWA-000	HORTUM RADYATOR SU 2WAY A HORTUM BORU	1	
06	1951A-HMA-010	HORTUM RADYATOR TERMOSTAT TUPU HORTUM BORU_(1951A-HMA-013)	1	
07	37880-HLK-900-M2	AS.MUSUR TERMOSTAT HARARET ISI SENSORU	1	

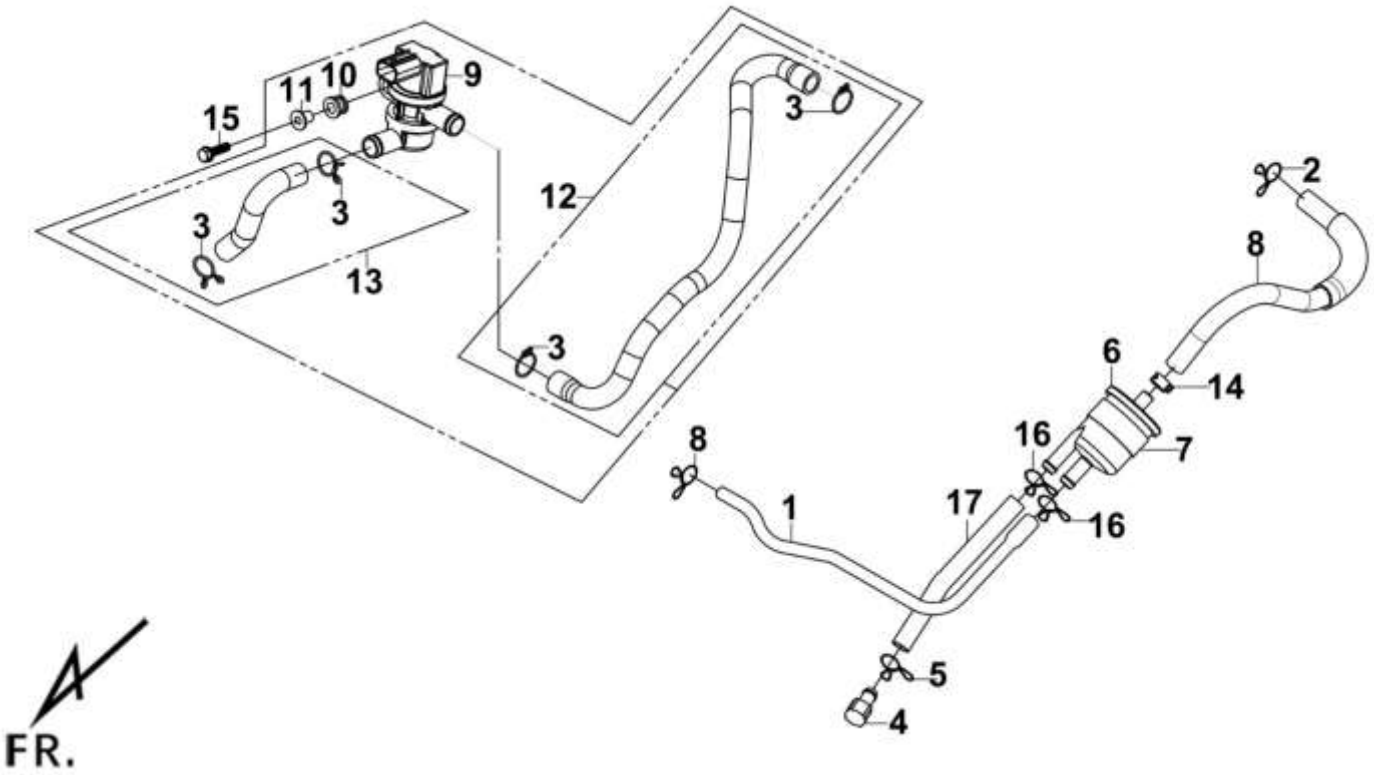

,

E04		TEA25T1CN-TRC(ZJ1/ ADXTG)		
HAVALANDIRMA HORTUMU				
NO	STOK KODU	ACIKLAMA	ADET	
01	11211-L3A-000	HORTUM HAVALANDIRMA HORTUMU	1	
02	15772-500-013	KELEPCE HAVALANDIRMA KELEPCESI	2	
03	17369-M9Q-000	KELEPCE HAVALANDIRMA TUPU KELEPCESI ADET_MAXTL508T.ADX300	4	

04	17370-M9Q-000	TAPA HAVALANDIRMA HORTUM UCU KAPAMA TAPASI_(17370-419-700)	1	
05	17371-M9Q-000	KELEPCE HAVALANDIRMA TUPU KELEPCESI	1	
06	17380-H6A-000	HAVA EMISYON HAVALANDIRMA TUPU ADET.	1	
07	17385-H6A-000	KELEPCE HAVA EMISYON HAVALANDIRMA TUPU TUTUCU BAND KELEPCESI	1	
08	17562-J01-000	HORTUM HAVA IS GIRIS VALF HORTUM BORU	1	
09	17590-MMA-000-TW	YAKIT AISV HAVA FILTRESI KAPATMA VALFI	1	
10	17591-HMC-000	TAKOZ YAKIT AISV HAVA FILTRESI KAPATMA VALFI KAUCUK LASTIK	1	
11	17592-HMC-000	BURCU HAVA FILTRESI KAPATMA VALFI BILEZIK YUZUK	1	
12	17593-J01-000	HORTUM HAVA FILTRESI KAPATMA VALFI TUPU A HORTUM BORU	1	
13	17594-J01-000	HORTUM HAVA FILTRESI KAPATMA VALFI TUPU B HORTUM BORU	1	
14	90682-V02-900	KELEPCE D11.5 HAVA KELEPCESI	1	
15	93401-05020-0H	CIVATA M5*20 A_I_S_V HAVA KAPATMA VALFI UNIT CIVATASI	1	
16	95002-80000	KELEPCE C12 FILTRE KELEPCESI	2	
17	95003-23022-10	HORTUM HAVA V TUPU M8* HORTUM BORU	1	

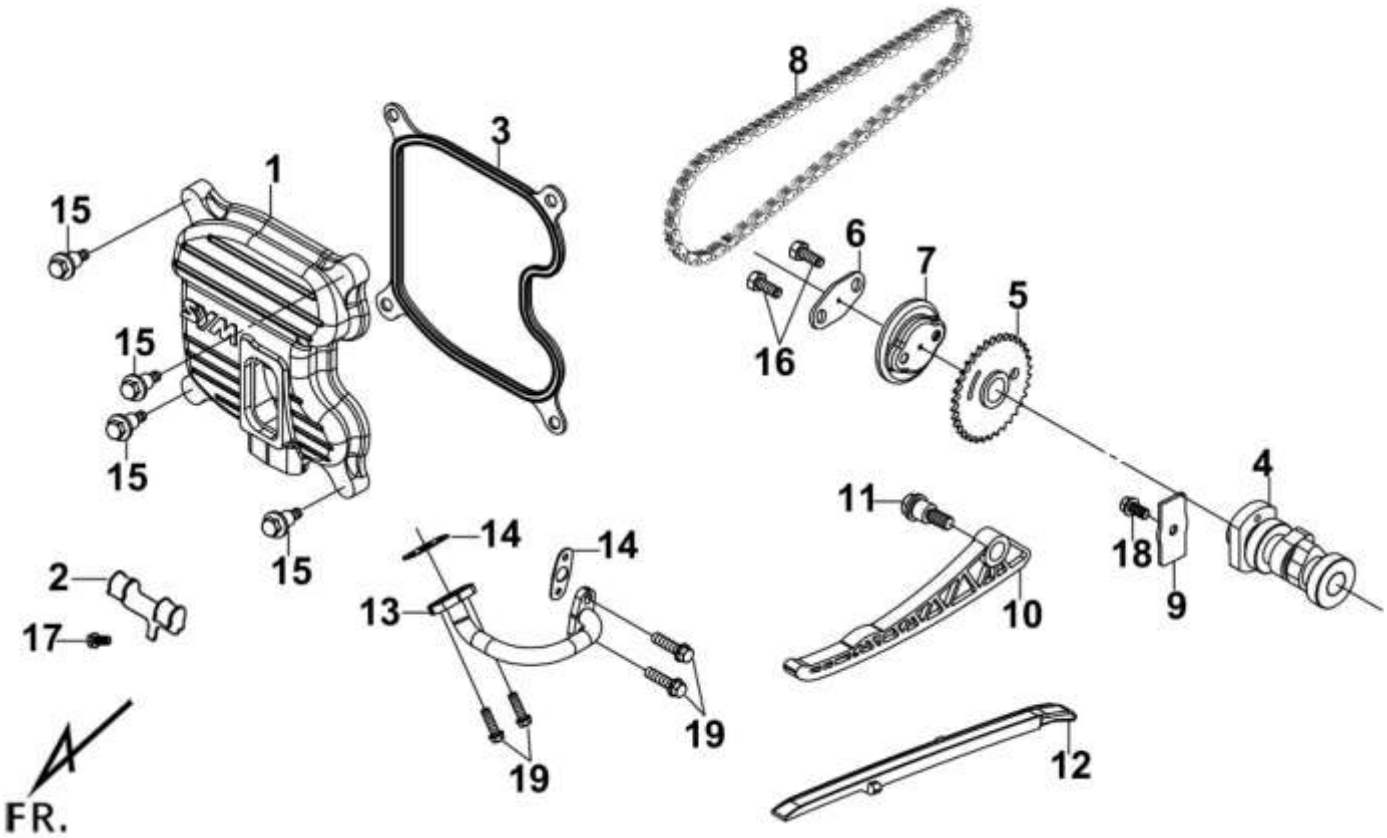

E05		TEA25T1CN-TRC(ZJ1/ ADXTG)	
KAM MILI - UST SUBAP KAPAGI			
NO	STOK KODU	ACIKLAMA	ADET
01	12301-XTA-000	SUBAP KAPAGI UST	1
02	12363-XTA-000	KELEPCE ATESLEME BOBINI KELEPCESI	1
03	12391-HMA-000	CONTASI SILINDIR SUBAP KAPAGI UST KALIP CONTASI	1
04	14100-J01-000	EKSANTRIK KAM MILI	1
05	14105-RFA-000-TW	EKSANTRIK DISLISI	1
06	14105-X01-000	ORINGPUL EKSANTRIK KAM DISLI PULU	1
07	14108-M36-000	EKSANTRIK DISKI SANTRIFUJ_(14100-HMC-000	1
08	14401-RFA-000	EKSANTRIK ZINCIRI 100L	1
09	14457-HMA-000	BRAKETI EKSANTRIK KAM MILI SABITLEYICI	1
10	14510-RFA-000	EKSANTRIK ZINCIR UST GERGI	1
11	14531-KJ9-000	CIVATA ZINCIR UST GERGI CIVATASI	1
12	14610-BCE-000	EKSANTRIK ZINCIR KILAVUZU ALT GERGI	1
13	18647-J01-000	HORTUM KATALIZOR CIKIS KOPRU HORTUMU BORU	1
14	18654-N14-000	CONTASI KATALIZOR CIKIS KOPRU HORTUMU CONTASI	2
15	90002-ANL-000	CIVATA M6*10 SILINDIR KAPAGI UST KAFA CIVATASI	4
16	92101-06016-0H	CIVATA M6*16 EKSANTRIK KAM MILI CIVATASI_(92101-06016-0A)	2
17	96001-06012-02	CIVATA M6*12 KRANK KUTUSU CIVATASI	1
18	96001-06014-08	CIVATA M6*14 EKSANTRIK KAM MILI CIVATASI_(90004-REA-000)	1
19	96001-06016-02	CIVATA M6*16 ECU ENJKSIONN SIST CIVATASI_(96001-06016-00)	4

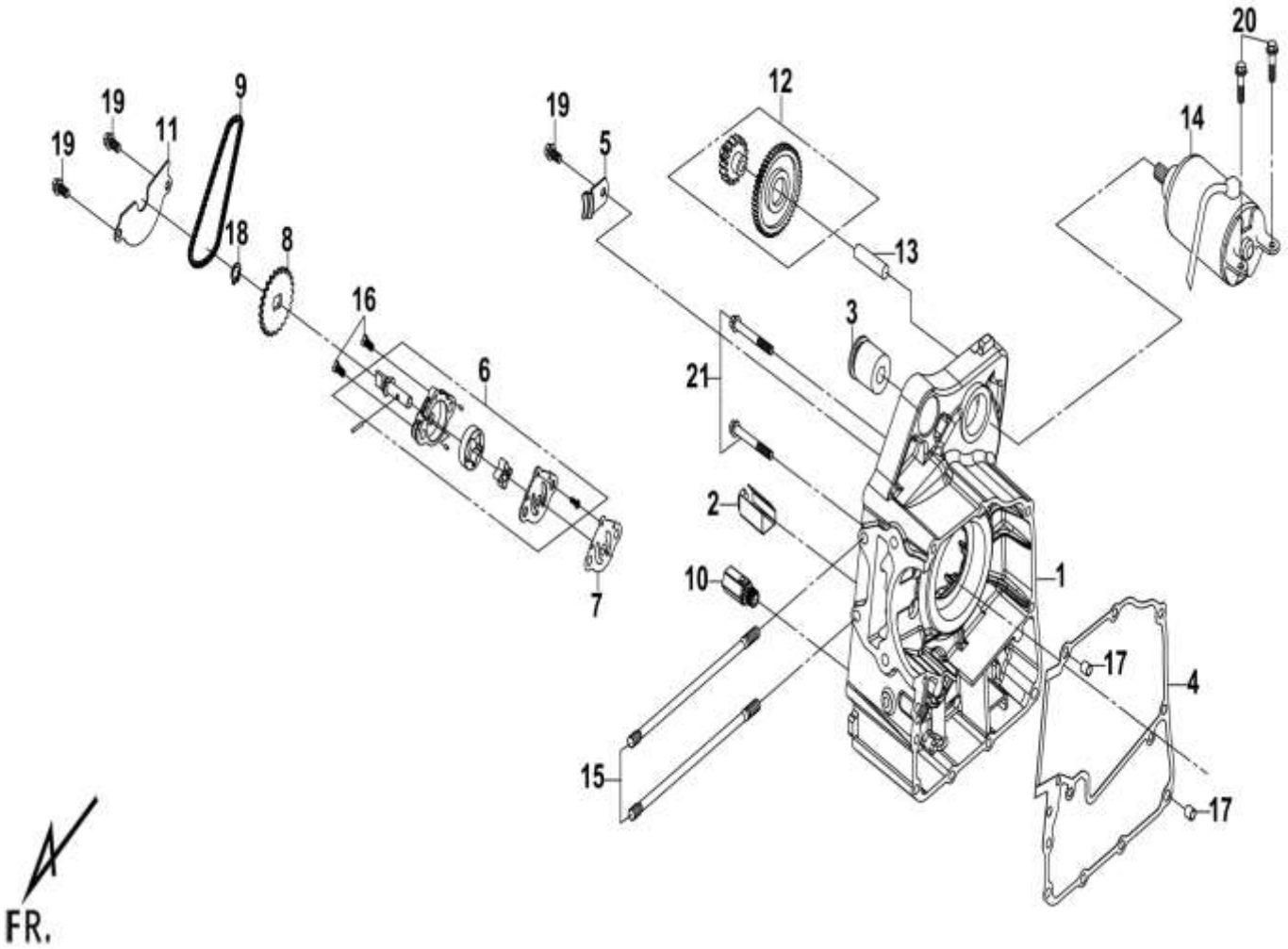

E06		TEA25T1CN-TRC(ZJ1/ ADXTG)	
YAG POMPASI - SAG KRANK KUTUSU			
NO	STOK KODU	ACIKLAMA	ADET
01	11100-L3A-000	KRANK KUTUSU_(KARTER)_SAG(R_)	1
02	11107-HMA-000	BRAKETI KRANK KARTER VIBRASYON SACI BRAKETI	1
03	11120-LEA-000	TAKOZ KRANK KARTER MOTOR TAKOZU_(11120-LEA-007)	1
04	11191-L3A-000	CONTASI KRANK KUTUSU KARTER ARA CONTASI SAG(R_)	1
05	14151-RFA-000	BRAKETI EKSANTRIK SABITLE SACI BRAKETI_(14108-LEF-000)	1
06	15100-HMA-000-TW	AMORTISOR ARKA Siyah ARKA XPRO125_(52400-AWR-000)	1
07	15126-XTF-000	CONTASI YAG POMPASI CONTASI	1
08	15133-HMA-000	AS.YAG POMPASI TAHRIK DISLISI	1
09	15141-HMA-000	YAG POMPASI ZINCIRI 48L	1
10	15200-HML-000-TW	TAPA YAG TAHLIYE VALFI	1
11	15711-HML-000	YAG POMPASI KAPAGI	1
12	28101-RB1-000	MARS DISLI KUCUK BUYUK SABIT DISLI	1
13	28102-RB1-000	PIMI MARS DISLI KUCUK BUYUK SABIT DISLI PIMI	1
14	31200-HMA-000	MARS MOTORU_(31200-HMA-100)	1
15	90031-HMA-000	CIVATA SILINDIR SAPLAMASI	2
16	92101-06025-0H	CIVATA M6*25 YAG POMPASI CIVATASI_(95701-06025-07)	2

17	94301-08140	PIMI KRANK PIMI M8*8*14 PIMI	2	
18	94510-10000	SEGMAN KRANK ORINGPUL 10MM	1	
19	96001-06012-08	CIVATA M6*12 YAG POMPASI CIVATASI	3	
20	96001-06022-02	CIVATA M6*22 SU POMPASI KAPAGI CIVATASI	2	
21	96001-06055-00	CIVATA M6*55 KRANK KUTUSUCIVATASI	2	

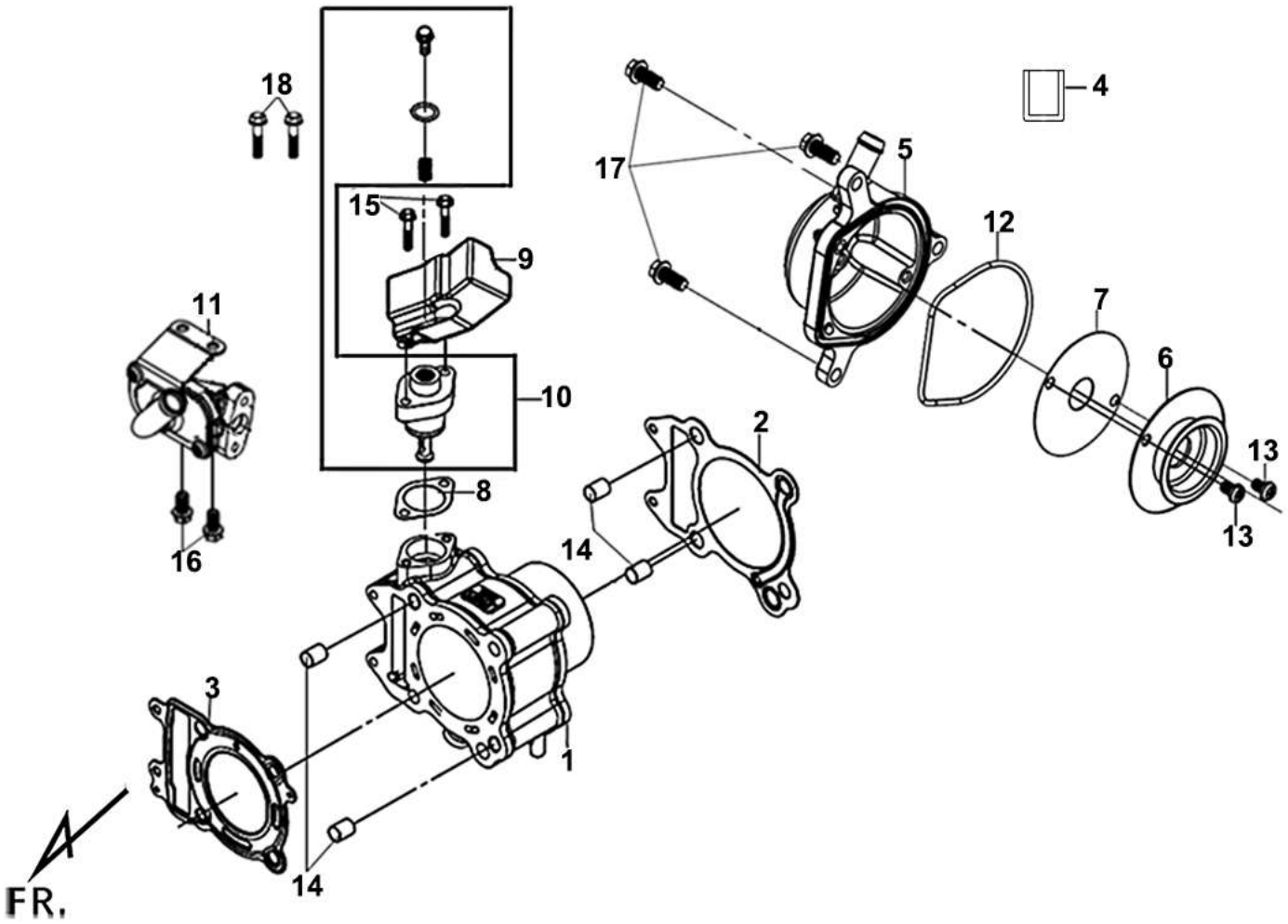

E07		TEA25T1CN-TRC(ZJ1/ ADXTG)		
SILINDIR				
NO	STOK KODU	ACIKLAMA	ADET	
01	12100-HMA-000-TW	SILINDIR	1	
02	12191-RFA-000-TW	CONTASI SILINDIR ALT CONTASI ADET _JYRD3E5.ADX300	1	
03	12251-BAA-000-TW	CONTASI SILINDIR UST KAPAGI CONTASI	1	
04	12306-NFC-000	BAGLANTI KAPAGI	1	
05	12310-L3A-000	EKSANTRIK DISLI KAPAGI ADET_JYRD3E5.JYRD3E5L.ADX300	1	
06	12312-NKA-000	BRAKETI HAVALANDIRMA PLAKASI ADET_JYRD3E5.ADX300	1	
07	12313-NKA-000	CONTASI HAVALANDIRMA PLAKASI CONTASI	1	
08	14523-Z8G-000	CONT.EKSANTRIK TANSIYONER KAYDIRICI CONTASI	1	
09	14525-J01-000	YAYI EKSANTRIK ZINCIR GERGI YAYI	1	

10	**1452A-J0D-000**	**GERGI KALDIRICI**	**1**	
11	**18600-LDA-000-TW**	**KATALIZOR**	**1**	
12	**91301-HMA-000**	**ORINGPUL SILINDIR ORINGPUL**	**1**	
13	**93500-05008-0H**	**CIVATA M5*8**	**2**	
14	**94301-12200**	**PIMI SILINDIR PISTON -PIMI 12*20 PIMI**	**4**	
15	**95701-06028-02**	**CIVATA M6*28 KRANK KUTUSU KAPAKCIVATASI**	**2**	
16	**96001-06012-08**	**CIVATA M6*12 YAG POMPASI CIVATASI**	**2**	
17	**96001-06018-02**	**CIVATA M6*18 SILINDIR UST KAFA KAPAGI CIVATASI**	**3**	
18	**96001-06090-02**	**CIVATA M6*90 SILINDIR CIVATASI**	**2**	

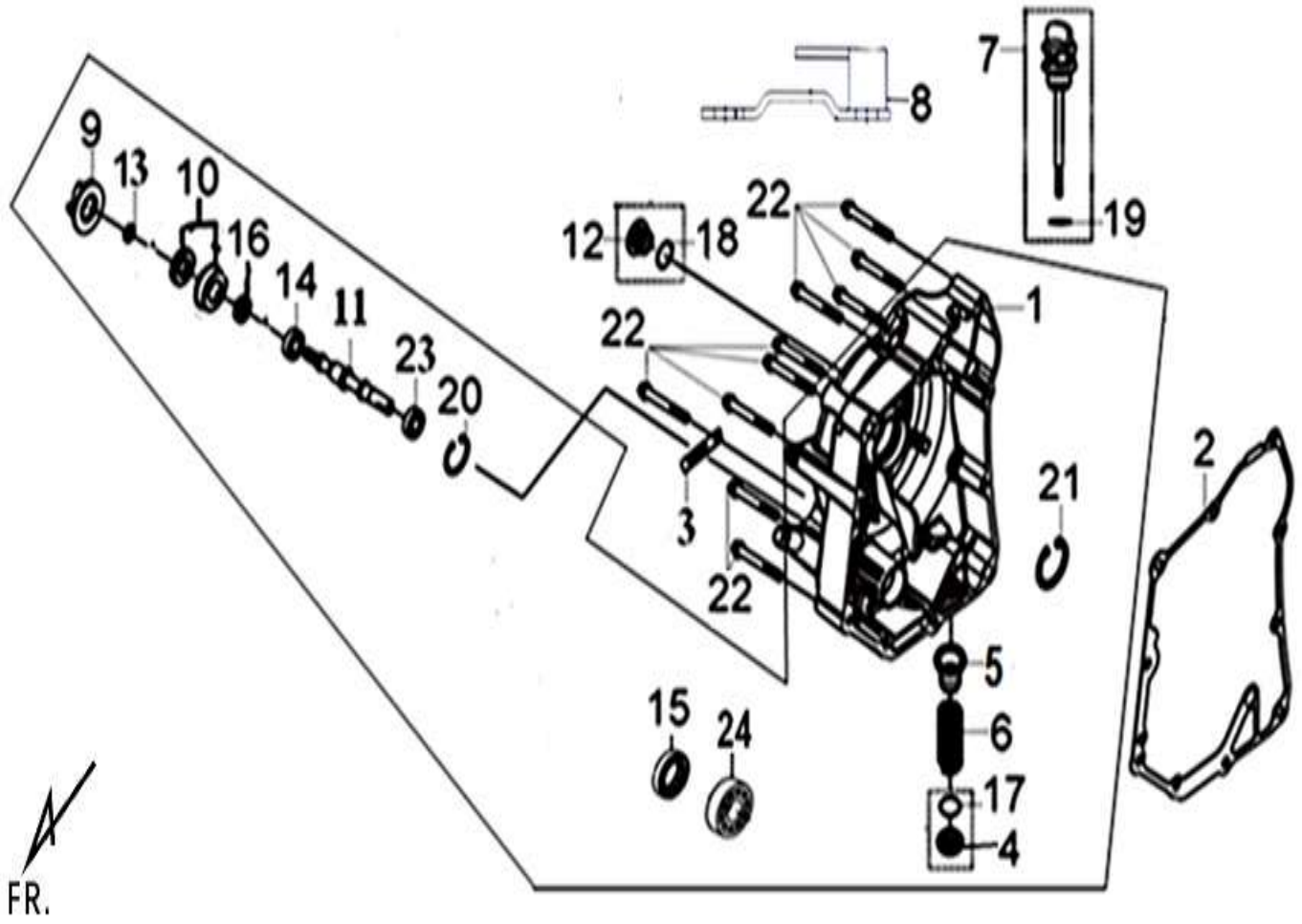

E08		**TEA25T1CN-TRC(ZJ1/ ADXTG)**	
SAG KRANK KUTUSU KAPAGI			
NO	**STOK KODU**	**ACIKLAMA**	**ADET**
01	**11330-J01-000**	**KRANK KUTUSU KAPAGI SAG(R_)**	**1**
02	**11394-J01-000**	**CONTASI KRANK KUTUSU KAPAGI CONTASI SAG(R_)**	**1**
03	**12342-X01-000**	**KELEPCE TANSIYONER UST KELEPCESI**	**1**
04	**12361-M9Q-000**	**AS.TAPA YAG DOLUM KAPAMA.ACMA TAPASI**	**1**

05	15421-B9D-000	FILTRE YAG FILTRESI ELEMANI SUZGEC_(15421-M9Q-000)	1	
06	15426-M9Q-000	YAYI FILTRE YAG FILTRESI YAYI	1	
07	1565A-J01-000	YAG SEVIYE GOSTERGESI KONTROL CUBUGU	1	
08	15713-J02-000	BRAKETI HAVA FILTRESI BRAKETI	1	
09	19215-HLA-000	RADYATOR SU POMPASI DEVIRDAIM RK PERVANE	1	
10	19217-TL1-300-TW	KECE MEKANIK CONTASI	1	
11	19231-LH1-000-TW	RADYATOR SU POMPASI DEVIRDAIM MILI	1	
12	90084-VBA-000	KARBURATOR AYAR KAPAGI SELE ALTI BAGAJ ICI SAG(R_)	1	
13	90423-KJ9-000	ORINGPUL 2*13*1 2 KRANK PULU	1	
14	91001-KJ9-005-M1	AS.RULMAN 6901.KD	1	
15	91202-HMA-000-M1	KECE 12 YAG TC12*22*5 KUTU/MUHAFAZA KAPAKKECESI	1	
16	91205-KF0-003	KECE 12 YAG 12X20X5 KUTU/MUHAFAZA KAPAKt KECESI SAG R.	1	
17	91302-M9T-000	ORINGPUL 30,8*3,2 ORINGPUL	1	
18	91304-VA2-000	ORINGPUL O8MM KRANK ORINGPUL	1	
19	91307-M8Q-000	ORINGPUL 18*3 KRANK O-RING PUL_(91307-VA2-000)	1	
20	94520-26000	SEGMAN KRANK ORINGPUL 55MM	1	
21	94520-28000	SEGMAN VARY.SEGMAN 55MM	1	
22	96001-06035-00	CIVATA M6*35 KUTU/MUHAFAZA KAPAKCIVATASI	10	
23	96100-60000	AS.RULMAN 6000	1	
24	96140-60013-00	RULMAN 6001 6001LUC3	1	

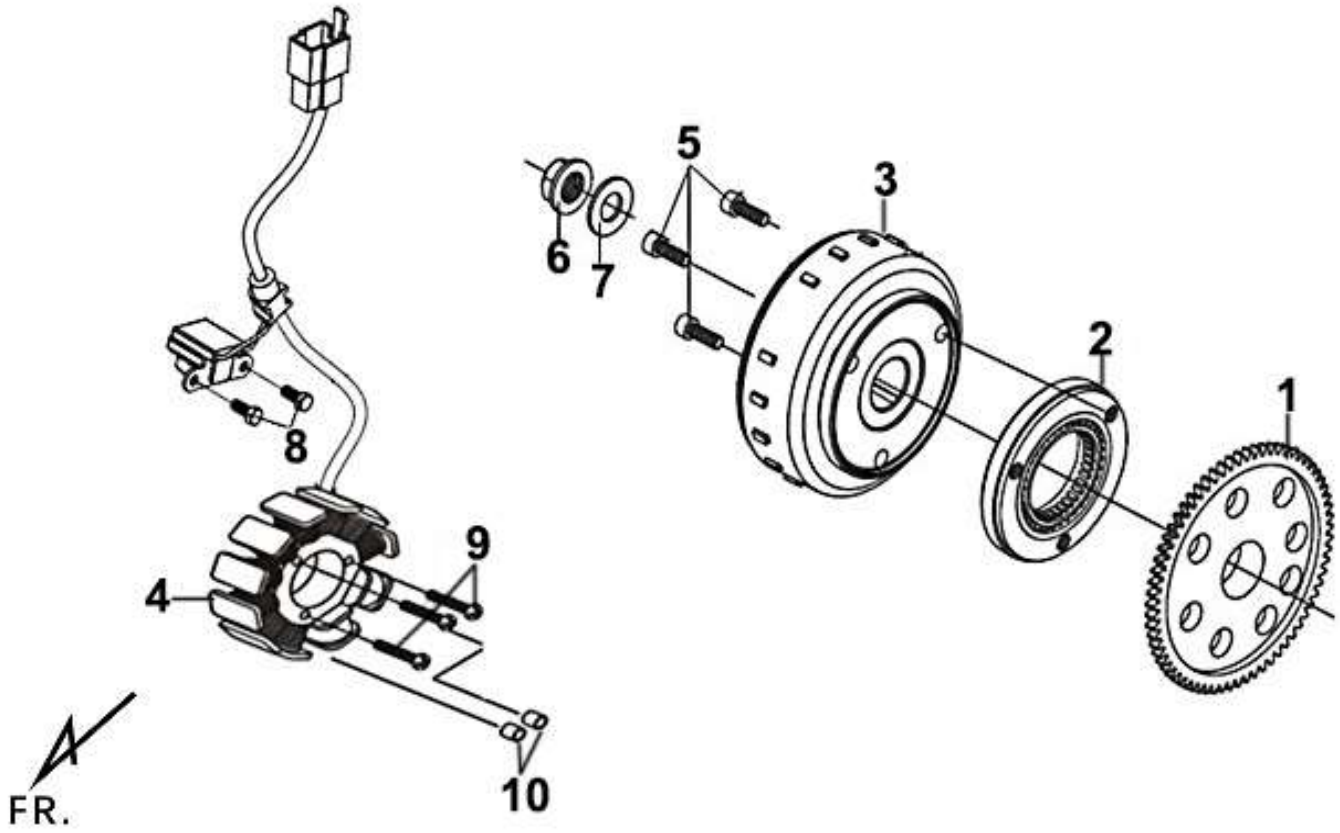

E09		TEA25T1CN-TRC(ZJ1/ ADXTG)	
STATOR			
NO	STOK KODU	ACIKLAMA	ADET
01	28110-XTA-000	MARS BUYUK KAVRAMA TORK DISLISI	1
02	2812A-XTA-000	MARS KAVRAMA TORKU BENDIX	1
03	31110-J01-000	VARYATOR DIS ROTOR TAMBUR	1
04	31120-LH1-000	STATOR	1
05	90157-F3G-000	CIVATA M8*20 GIDON KUMANDA KABLO CIVATASI_(96700-08020-02)	3
06	90201-KR8-751-M1	SOMUN 14MM VARYATOR SOMUNU_(90201-REA-000)_ARKA	1
07	90401-KJ9-000	ORINGPUL 14*28*2 BASKI(ITME)_PULU ARKA	1
08	92101-05016-0H	CIVATA M5*16	2
09	93401-05035-08	CIVATA M5*35 VARYATOR/STATOR CIVATASI	3
10	94301-08140	PIMI KRANK PIMI M8*8*14 PIMI	2

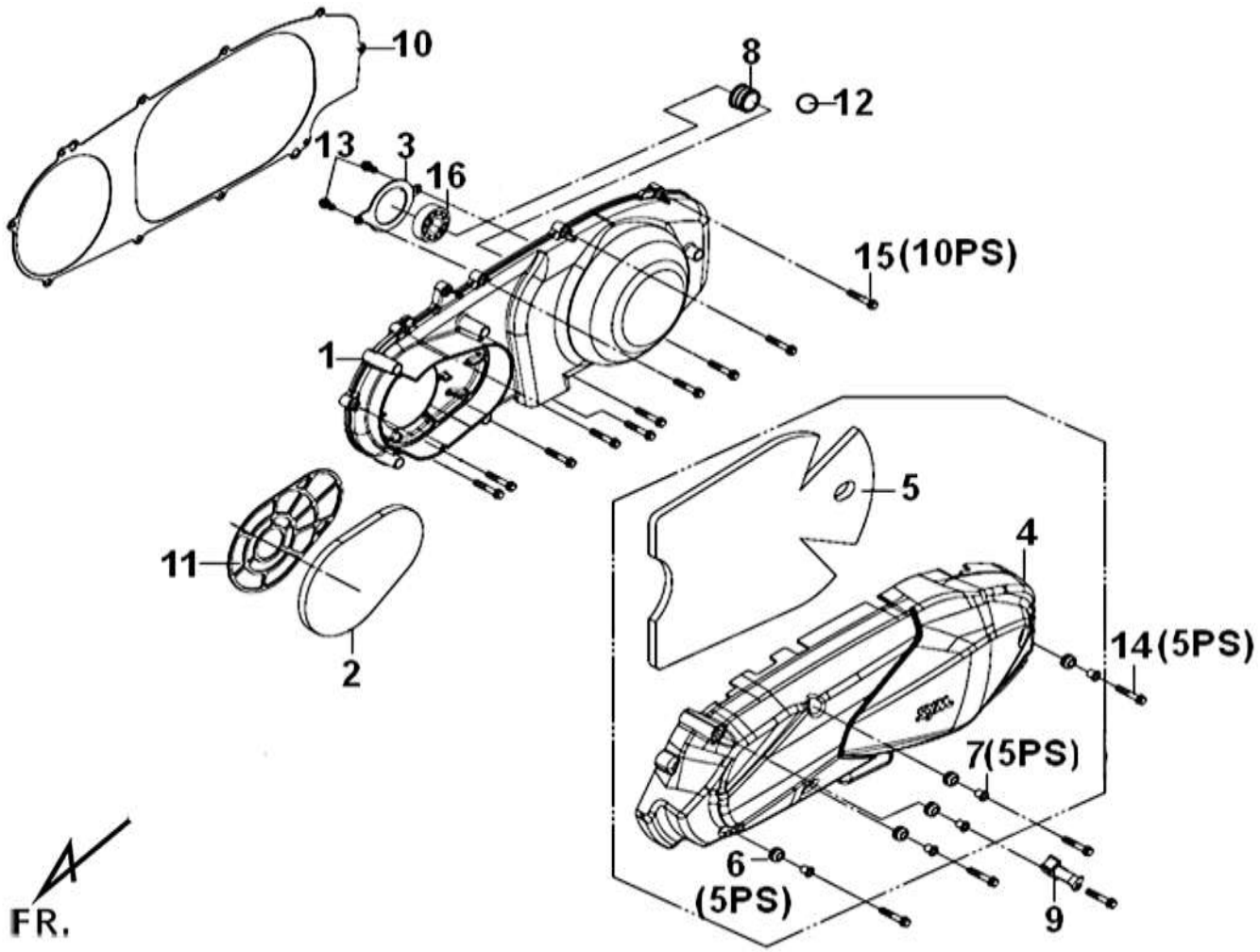

E10		TEA25T1CN-TRC(ZJ1/ ADXTG)	
SOL KRANK KUTUSU KAPAGI			
NO	STOK KODU	ACIKLAMA	ADET
01	11341-J01-010	VARY.DIS KRANK KUTUSU KAPAGI SOL	1
02	11344-HMA-000	FILTRE VARYATOR KUTUSU KAPAGI SUNGER FILTRE SOL(L_)	1
03	11346-HMA-000	BRAKETI KRANK KUTUSU KAPAGI RULMAN BRAKETI SOL(L_)	1
04	11351-J01-010	VARYATOR DIS KORUMA KAPAGI UST KUTUSU KAPAGI SOL(L_)	1
05	11352-XTA-000	FILTRE VARY.KUTUSU KAPAGI FILTRE ELEMANI SOL	1
06	11354-H3A-000	BURCU VARYATOR KUTUSU KAPAGI KAUCUK LASTIK BURCU ON SOL(L_)	5
07	11356-H3A-000	BURCU VARYATOR KUTUSU KAPAGI KAUCUK LASTIK BURCU ON SOL(L_)	5
08	11371-HMA-000-TW	BURCU VARYATOR ON VARY_KAPAGI BURCU	1
09	11383-LH3-000	KELEPCE KLIPS HAVALANDIRMA HORTUMU KELEPCESI	1
10	11395-J01-010	CONTASI KRANK VARYATOR KAPAGI CONTASI SOL(L_)	1
11	17221-LEA-000	BRAKETI VARYATOR KAPAGI FILTRE SACI_(17221-HMA-000)	1
12	91303-HMA-000	ORINGPUL 26 5*2 0 KRANK ORINGPUL	2
13	96001-06012-00	CIVATA M6*12 ECU ENJKSIONN SIST CIVATASI	2
14	96001-06022-07	CIVATA M6*22 KRANK KUTUSU KAPAGI CIVATASI	5

15	**96001-06025-00**	**CIVATA M6*25 KRANK KUTUSU KAPAGI CIVATASI_(96001-06025-07)**	**10**	
16	**96150-60060-10**	**RULMAN 6006 6006LLU_(96100-60060-00)**	**1**	

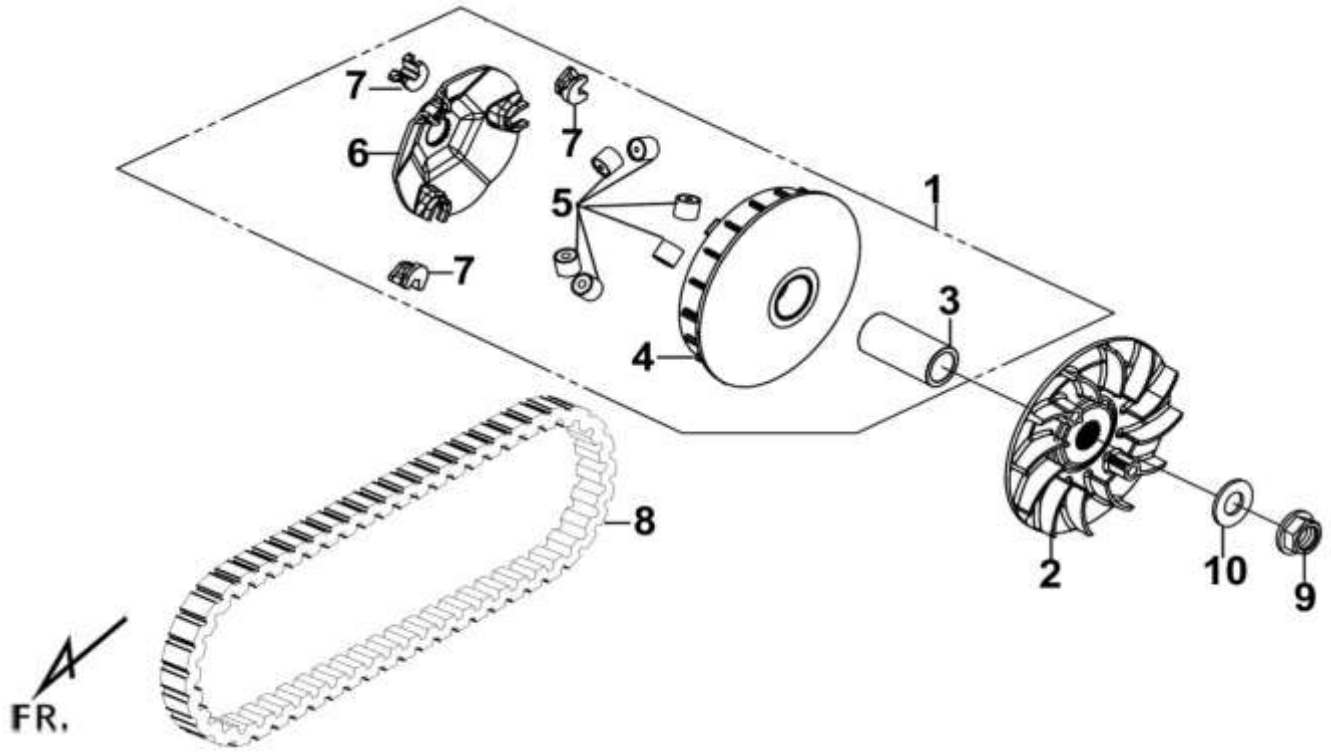

E11		**TEA25T1CN-TRC(ZJ1/ ADXTG)**		
ON VARYATOR				
NO	**STOK KODU**	**ACIKLAMA**	**ADET**	
01	**22000-J31-000**	**ON VARYATOR KOMPLE**	**1**	
02	**22102-XTA-000**	**VARYATOR SOGUTMA FANI**	**1**	
03	**22105-J31-000**	**BURCU VARYATOR ON VARY_GOBEK BURCU**	**1**	
04	**22110-XTA-000**	**VARY.ON OYNAR YANAK**	**1**	
05	**22121-XTA-001-A**	**VARYATOR ON AGIRLIK BAGA A_SET**	**1**	
06	**22131-LM7-000**	**BRAKETI VARYATOR AGIRLIK BAGA YUVASI PLAKASI ON**	**1**	
07	**22132-XTA-000-A-XS**	**VARYATOR ON BAGA TIRNAK KIZAK KAYMA SIYAH_XS A_SET 3PCS/1SET**	**1**	
08	**23100-LHA-000**	**TAHRIK KAYISI**	**1**	
09	**90201-KR8-751-M1**	**SOMUN 14MM VARYATOR SOMUNU_(90201-REA-000)_ARKA**	**1**	
10	**90401-KJ9-000**	**ORINGPUL 14*28*2 BASKI(ITME)_PULU ARKA**	**1**	

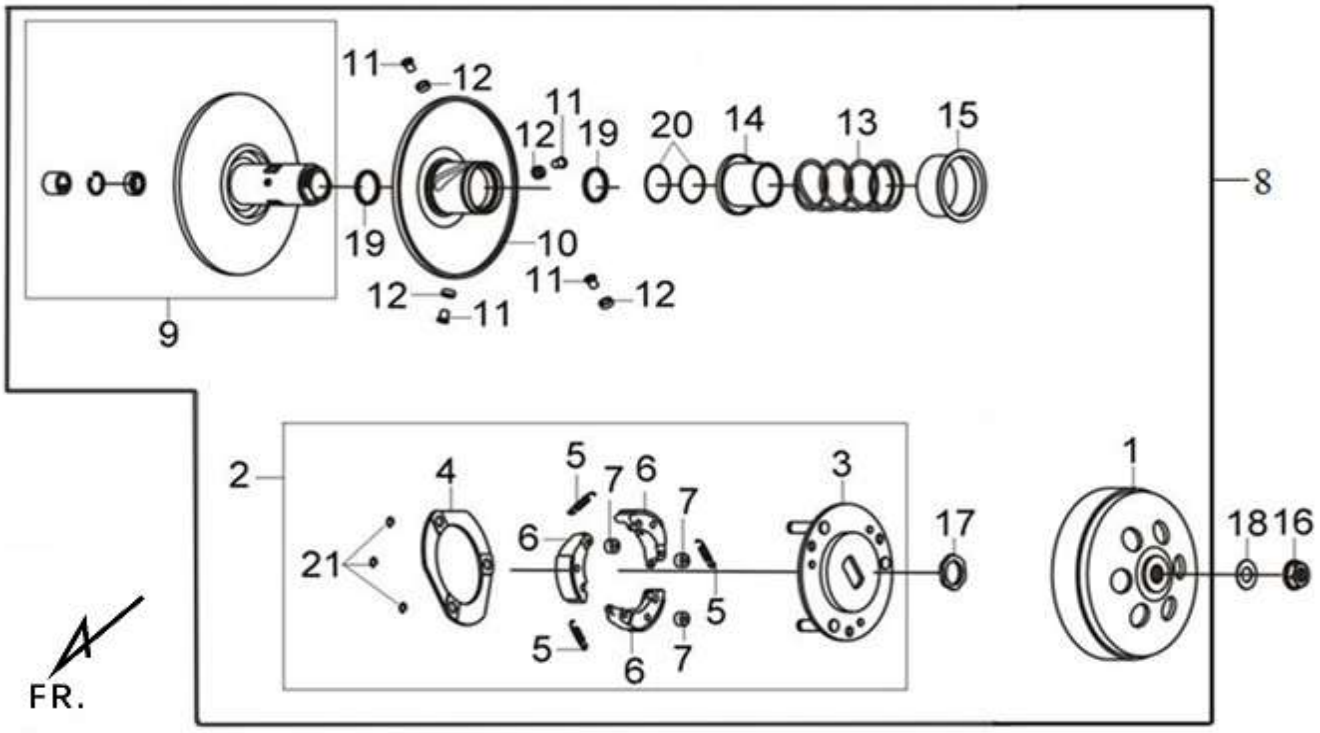

E12		TEA25T1CN-TRC(ZJ1/ ADXTG)		
ARKA VARYATOR				
NO	STOK KODU	ACIKLAMA	ADET	
01	22101-L2C-000	VARYATOR DIS TAMBUR ROTOR DEBRIYAJ DIS GOVDE	1	
02	22300-L2C-000	VARYATOR DEBRIYAJ BALATASI_(YAY_BALATA_BRAKET_SAC_22530-HMA-000-A)	1	
03	22350-L2C-000	VARY.DEBRIYAJ BALATA TAMBUR ROTORU GECEN PARCA ARKA	1	
04	22361-L2C-000	BRAKETI VARYATOR DEBRIYAJ BALATA TAMBUR ROTOR SACI	1	
05	22401-L2C-000	YAYI VARYATOR DEBRIYAJ BALATASI YAYI	3	
06	22530-L2C-000-A-XS	VARYATOR DEBRIYAJ BALATASI YAYLI BALATA SIYAH_XS A_SET 3PCS/1SET	1	
07	22804-L2C-000	BURCU VARYATOR DEBRIYAJ BALATA LASTIK BURCU	3	
08	2301A-L2C-000	VARY.ROTORLU ARKA	1	
09	23200-L2C-000	VARY.SABIT YANAK ARKA	1	
10	23220-L2C-000	VARY.OYNAR YANAK ARKA	1	
11	23225-L2C-000	PIMI VARYATOR OYNAR YANAK PIMI ARKA	4	
12	23226-L2C-000	BURCU VARYATOR OYNAR YANAK PIMI BURCU ARKA	4	
13	23233-L2C-000	YAYI VARYATOR YAYI OYNAR YANAK YAYI ARKA	1	
14	23237-L2C-000	BURCU VARYATOR ARKA BILEZIGI IC ARKA	1	
15	23238-L2C-000	BURCU YAYI VARYATOR BILEZIGI DIS	1	
16	90201-KR8-751-M1	SOMUN 14MM VARYATOR SOMUNU_(90201-REA-000)_ARKA	1	
17	90202-L2C-000	SOMUN VARYATOR SOMUNU	1	
18	90401-KJ9-000	ORINGPUL 14*28*2 BASKI(ITME)_PULU ARKA	1	
19	91211-L2C-000	KECE VARYATOR YAG VARYATOR KECESI	2	

20	**91305-L2C-000**	**ORINGPUL O47*2 0 VARYATOR ORINGPUL**	**2**	
21	**94540-L2C-000**	**SEGMAN VARYATOR SEGMAN 8MM**	**3**	

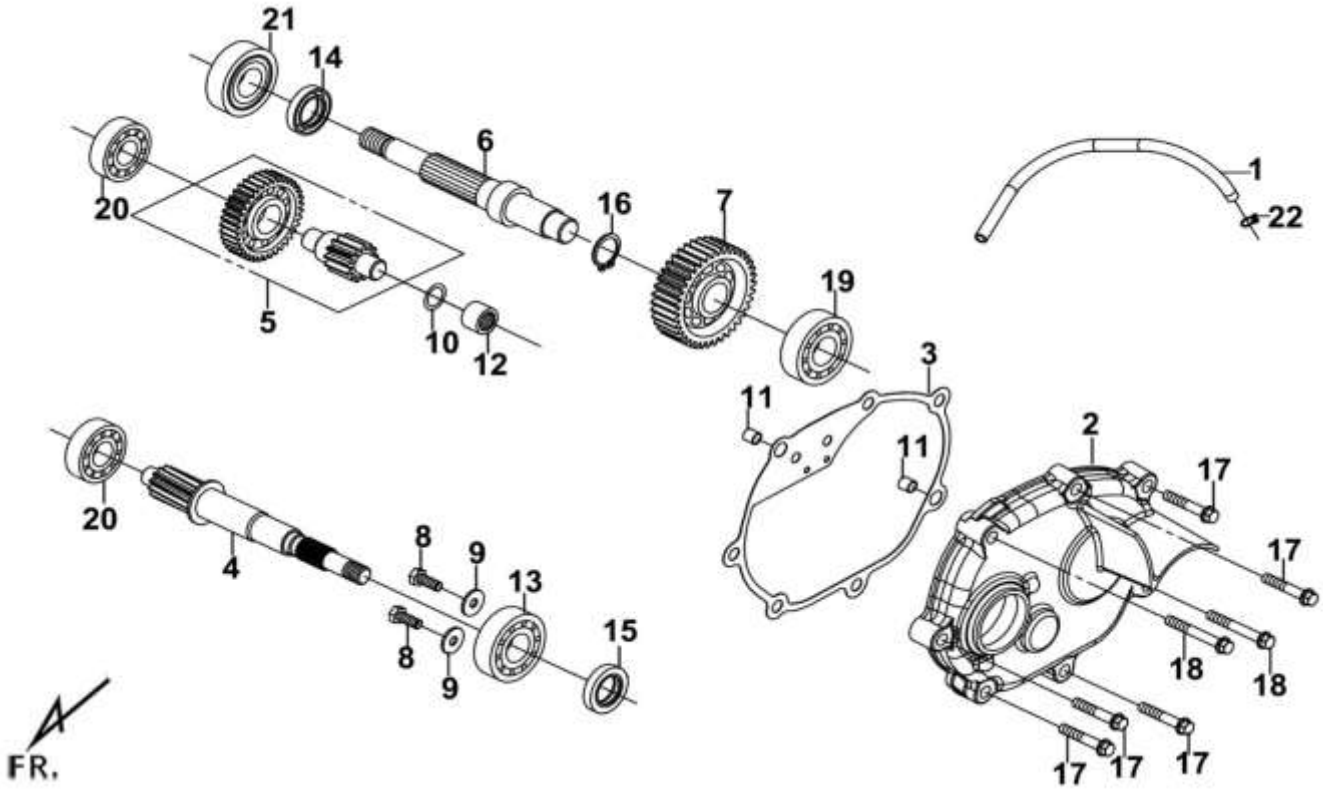

E13		**TEA25T1CN-TRC(ZJ1/ ADXTG)**		
SANZIMAN				
NO	**STOK KODU**	**ACIKLAMA**	**ADET**	
01	**11221-J01-000**	**HORTUM HAVALANDIRMA HORTUMU**	**1**	
02	**21301-J01-000**	**SANZIMAN KAPAGI IC KUTUSU**	**1**	
03	**21395-J01-000**	**CONTASI SANZIMAN KAPAGI IC KUTUSU CONTASI**	**1**	
04	**23411-LM7-000**	**SANZIMAN TAHRIK MILI**	**1**	
05	**23420-J01-000**	**SANZIMAN ARA DISLISI COUNTER SHAFT**	**1**	
06	**23431-J01-000**	**SANZIMAN AKS MILI FINAL SHAFT**	**1**	
07	**23432-J01-000**	**DISLI SANZIMAN AKS DISLISI FINAL GEAR**	**1**	
08	**90001-B9D-000**	**CIVATA M6*16 CLASIC_(95801-10040-08)**	**2**	
09	**90401-B9D-000**	**ORINGPUL 6_2*18*1_6 ADET_(PKT5)**	**2**	
10	**90401-HMA-000**	**ORINGPUL 15MM BASKI SANZIMAN PULU ADET_(PKT5)**	**1**	
11	**90703-M8Q-000**	**PIMI SILINDIR PISTON PIMI 10*14 PIMI**	**2**	
12	**91002-HWA-000**	**RULMAN MASURA NK*15*23*16 KRANK KUTU_(91002-HWA-000-M1)**	**1**	
13	**91009-HMC-000**	**RULMAN 6205 CSB 6205**	**1**	
14	**91203-HMA-000**	**KECE YAG TC34X52X5 SANZIMAN KAPAGI KECESI**	**1**	
15	**91204-HMA-000-M2**	**KECE 25 YAG 25*40*7 SANZIMAN KAPAGI.DRIVE MILI SAFT .KECESI**	**1**	

16	**94510-30000**	**SEGMAN SANZIMAN SEGMAN 20MM ADET_(PKT5)**	**1**	
17	**95801-08035-00**	**CIVATA M8*35 JANT ARKA/ARKA CUSHION CIVATASI_(95801-08035-07)_ADET_(PKT5)**	**5**	
18	**95801-08045-00**	**CIVATA M8*45 KRANK KUTUSU CIVATASI_(95801-08045-07)_ADET_(PKT5)**	**2**	
19	**96100-62050-10**	**RULMAN 6205_(91001-M3G-000)_SAG(R_)**	**1**	
20	**96100-63020-00**	**RULMAN 6302_(91051-H3A-000)**	**2**	
21	**96150-62050-10-TW**	**RULMAN 6205 6205LLU**	**1**	
22	**95002-80000**	**KELEPCE C12 FILTRE KELEPCESI ADET_(PKT5)**	**1**	

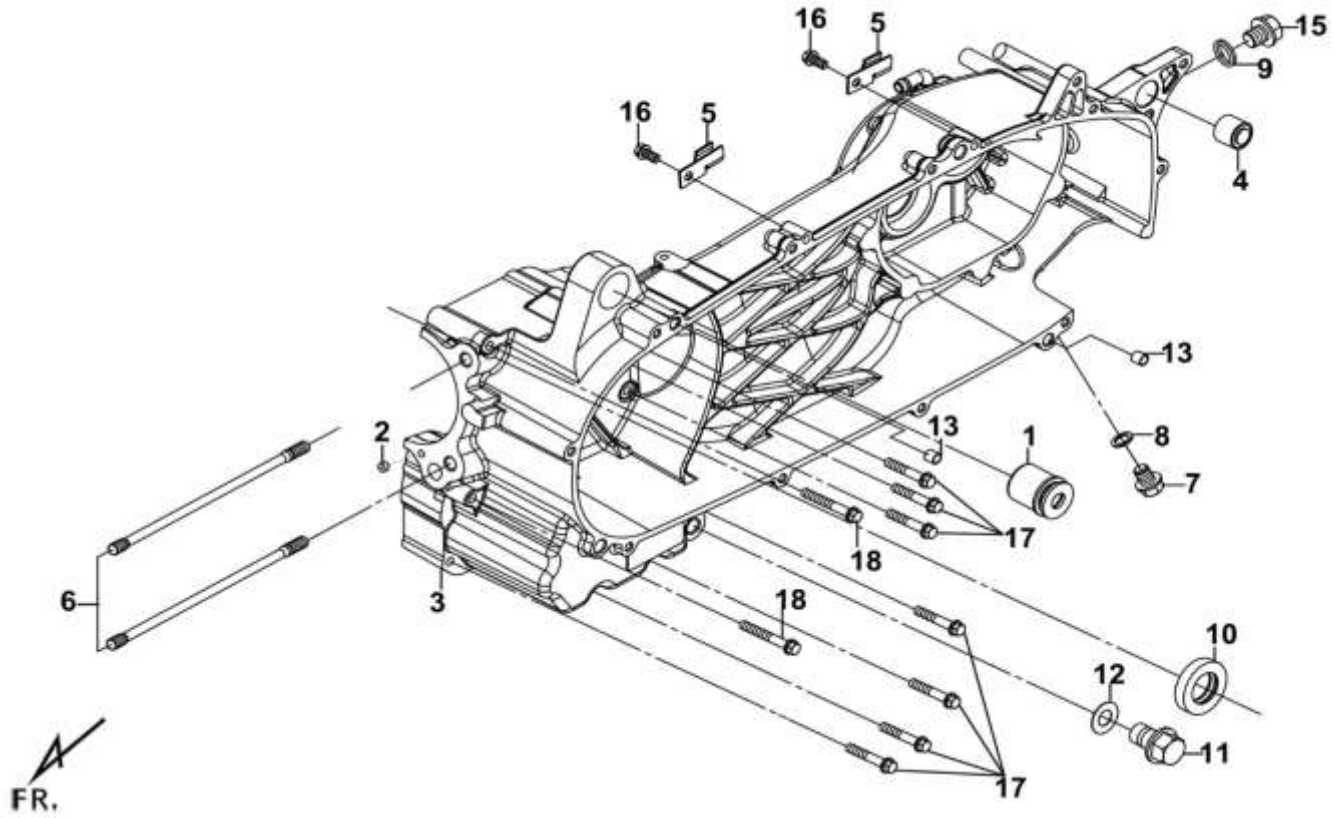

E14		**TEA25T1CN-TRC(ZJ1/ ADXTG)**		
SOL KRANK KUTUSU				
NO	**STOK KODU**	**ACIKLAMA**	**ADET**	
01	**11120-LEA-000**	**TAKOZ KRANK KARTER MOTOR TAKOZU_(11120-LEA-007)**	**1**	
02	**11133-A1A-300**	**BURCU KRANK KUTUSU SABITLEME BURCU 6*5 SOL(L_)_ADET_(PKT5)**	**1**	
03	**11200-J01-000**	**KRANK KUTUSU_(KARTER)_ON SOL(L_)**	**1**	
04	**11203-M9Q-300**	**BURCU KRANK KUTUSU YASTIK TAKOZU BURCU.ARKA SOL**	**1**	
05	**11205-XTA-000**	**KELEPCE KRANK KUTUSU KABLO BAGLANTISI KELEPCESI**	**2**	
06	**90032-HMA-000**	**CIVATA SILINDIR SAPLAMASI B ADET_(PKT5)**	**2**	
07	**90103-KN8-000**	**AS.YAY.TAPA YAG DOLUM KAPAMA.ACMA(YAG BASINC) VIDASI TAPASI**	**1**	

08	90474-M9Q-000	ORINGPUL 8MM SILINDIR PULU_(90474-333-000)_ADET_(PKT5)	1	
09	90495-F91-000	ORINGPUL 10MM KRANK TAHLIYE TAPA PULU ADET_(PKT5)	1	
10	91201-HMA-300	KECE 27 YAG TC27X42X7 KRANK KUTUSU KECESI	1	
11	92800-12000	CIVATA M12 MM CIVATASI	1	
12	94109-12000	ORINGPUL 12MM KRANK TAHLIYE TAPA PULU	1	
13	94301-08140	PIMI KRANK PIMI M8*8*14 PIMI	2	
14	94510-20000	SEGMAN KRANK ORINGPUL 20MM ADET_(PKT5)	1	
15	95701-10012-00	CIVATA M10*12 KRANK KUTUSU CIVATASI_(90035-KZ1-000)_ADET_(PKT5)	1	
16	96001-06012-08	CIVATA M6*12 YAG POMPASI CIVATASI ADET_(PKT5)	2	
17	96001-06050-00	CIVATA M6*50 KRANK KUTUSU CIVATASI_(96001-06050-08)_ADET_(PKT5)	7	
18	96001-06070-00	CIVATA M6*70 KRANK KUTUSU CIVATASI ADET_(PKT5)	2	

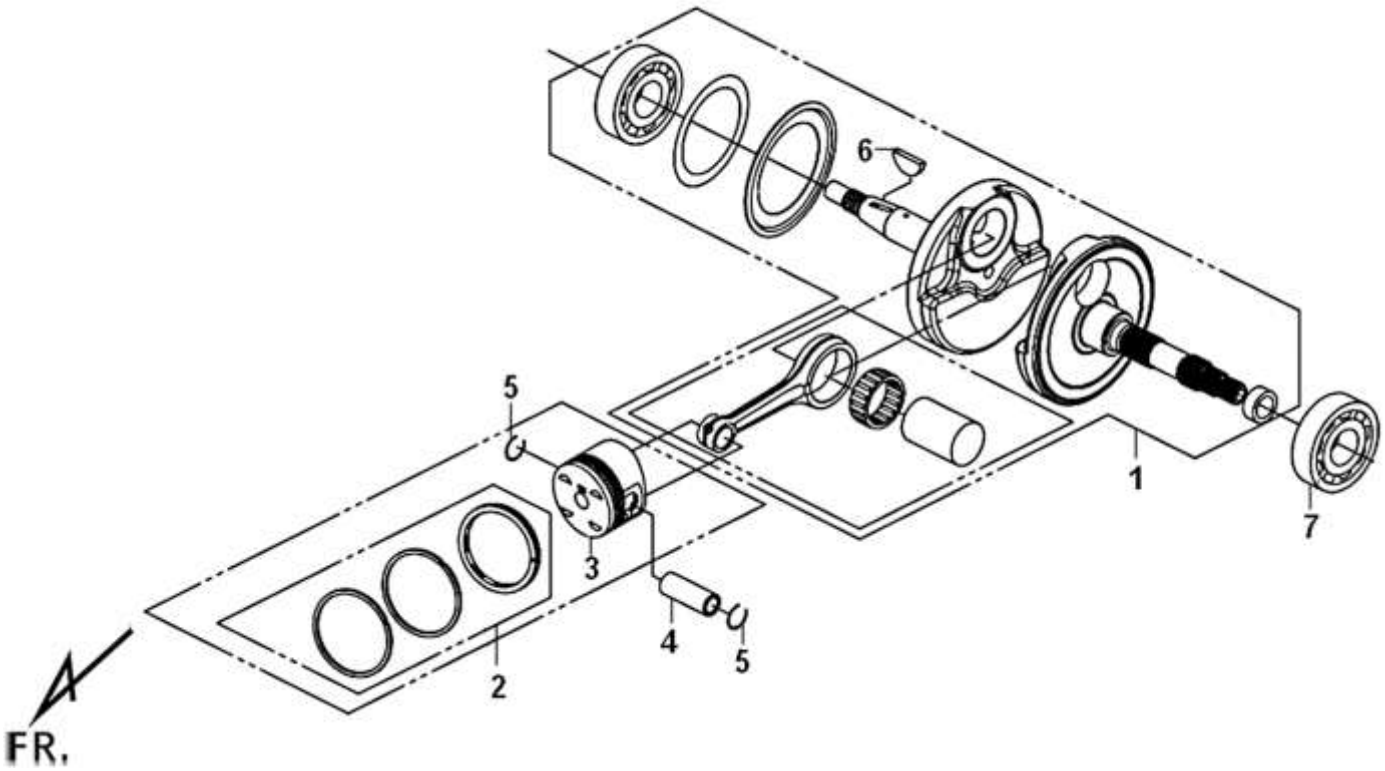

E15		TEA25T1CN-TRC(ZJ1/ ADXTG)		
KRANK				
NO	STOK KODU	ACIKLAMA	ADET	
01	13000-LH3-000	KRANK TEK RULMAN DAHIL	1	
02	13010-HMA-000-TW	SILINDIR PISTONU SEGMANI	1	
03	13101-HMA-000-TW	SILINDIR PISTONU CIPLAK	1	
04	13111-HMA-000	PIMI SILINDIR PISTONU PIMI ADET_(PKT5)	1	
05	90601-HMA-000	SILINDIR PISTON PIMI SEKMANI 17MM ADET_(PKT5)	2	

06	**90701-HB6-010**	**KAMA KRANK KAMASI 25*14*4 ADET_(PKT5)**	**1**	
07	**91001-XTD-000**	**RULMAN 6306 TMB 306JR2C3 SOL(L_)**	**1**	

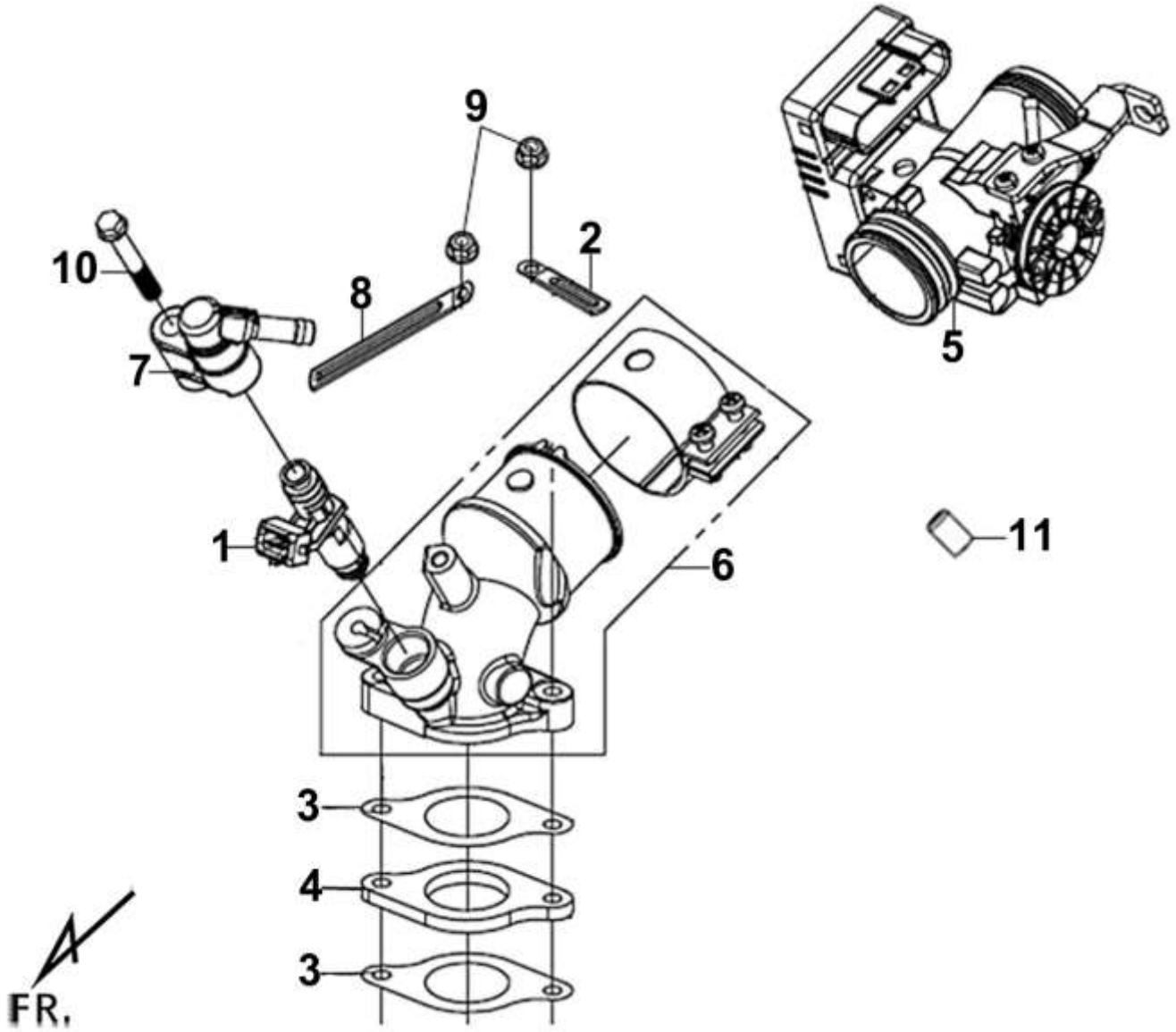

E16		**TEA25T1CN-TRC(ZJ1/ ADXTG)**		
ECU				
NO	**STOK KODU**	**ACIKLAMA**	**ADET**	
01	**06414-XTA-000**	**ENJK FUEL ENJKSIONN ENJEKTOR**	**1**	
02	**12342-X01-000**	**KELEPCE TANSIYONER UST KELEPCESI ADET_(PKT5)**	**1**	
03	**16201-HMC-000**	**CONT.KARB.MANIFOLD IZ.CONTA**	**2**	
04	**16211-XTA-000**	**CONTASI KARBURATOR MANIFOLD IZALATOR CONTA ON**	**1**	
05	**1640A-ZJ1-600**	**ECU**	**1**	
06	**1711A-J01-000**	**KARBURATOR MANIFOLDU**	**1**	
06_1	**16219-J01-000**	**KELEPCE HAVA GIRIS HORTUM BORU KELEPCESI**	**1**	
07	**17120-XTA-000**	**ENJK YAKIT ENJEKTORU KAPAGI**	**1**	

08	**32162-H6T-000**	**KELEPCE 2*100SH6T LOGO ETIKET CLIP**	**1**	
09	**94050-06000**	**SOMUN 6MM ECU ENJKSIONN SIST SOMUNU ADET_(PKT5)**	**2**	
10	**96001-06040-00**	**CIVATA M6*40 ECU ENJKSIONN SIST CIVATASI_(96001-06040-07)_ADET_(PKT5)**	**1**	
11	**12306-ANL-000**	**HAVALANDIRMA BAGLANTI KAPAGI**	**1**	

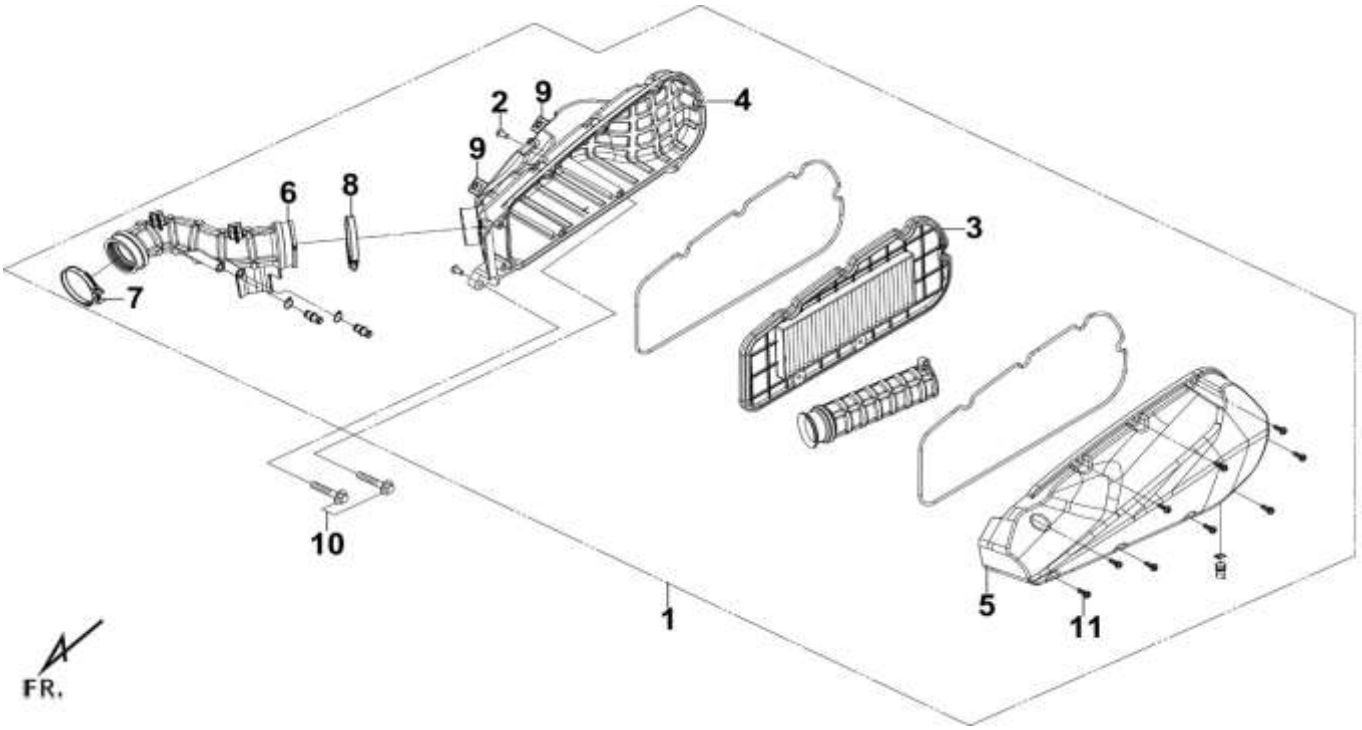

E17		**TEA25T1CN-TRC(ZJ1/ ADXTG)**		
HAVA FILTRESI				
NO	**STOK KODU**	**ACIKLAMA**	**ADET**	
01	**17200-J01-000**	**HAVA FILTRESI KUTUSU**	**1**	
02	**17208-HMA-000**	**BURCU HAVA FILTRESI BURCU**	**1**	
03	**17211-J01-000**	**HAVA FILTRESI ELEMANI IC FILTRE**	**1**	
04	**17230-J01-000**	**HAVA FILTRESI GOVDESI KAPAKSIZ KUTUSU**	**1**	
05	**17231-J01-000**	**HAVA FILTRESI KUTUSU KAPAGI**	**1**	
06	**17253-J01-000**	**HORTUM HAVA FILTRESI HORTUMU**	**1**	
07	**90652-FDD-000**	**KELEPCE HAVA FILTRESI BAGLANTI HORTUMU KELEPCESI**	**1**	
08	**90652-RB1-000**	**KELEPCE HAVA FILTRESI BAGLANTI HORTUMU KELEPCESI**	**1**	
09	**90677-M9Q-000**	**SOMUN 5MM CAMURLUK ARKA SOMUNU_(90677-M8Q-000)_ADET_(PKT5)**	**2**	
10	**93404-06030-07**	**CIVATA M6*30 HAVA FILTRESI CIVATASI**	**2**	
11	**93891-05016-07**	**CIVATA M5*16 KAPAGI CIVATASI_(93903-35380)_ADET_(PKT5)**	**9**	

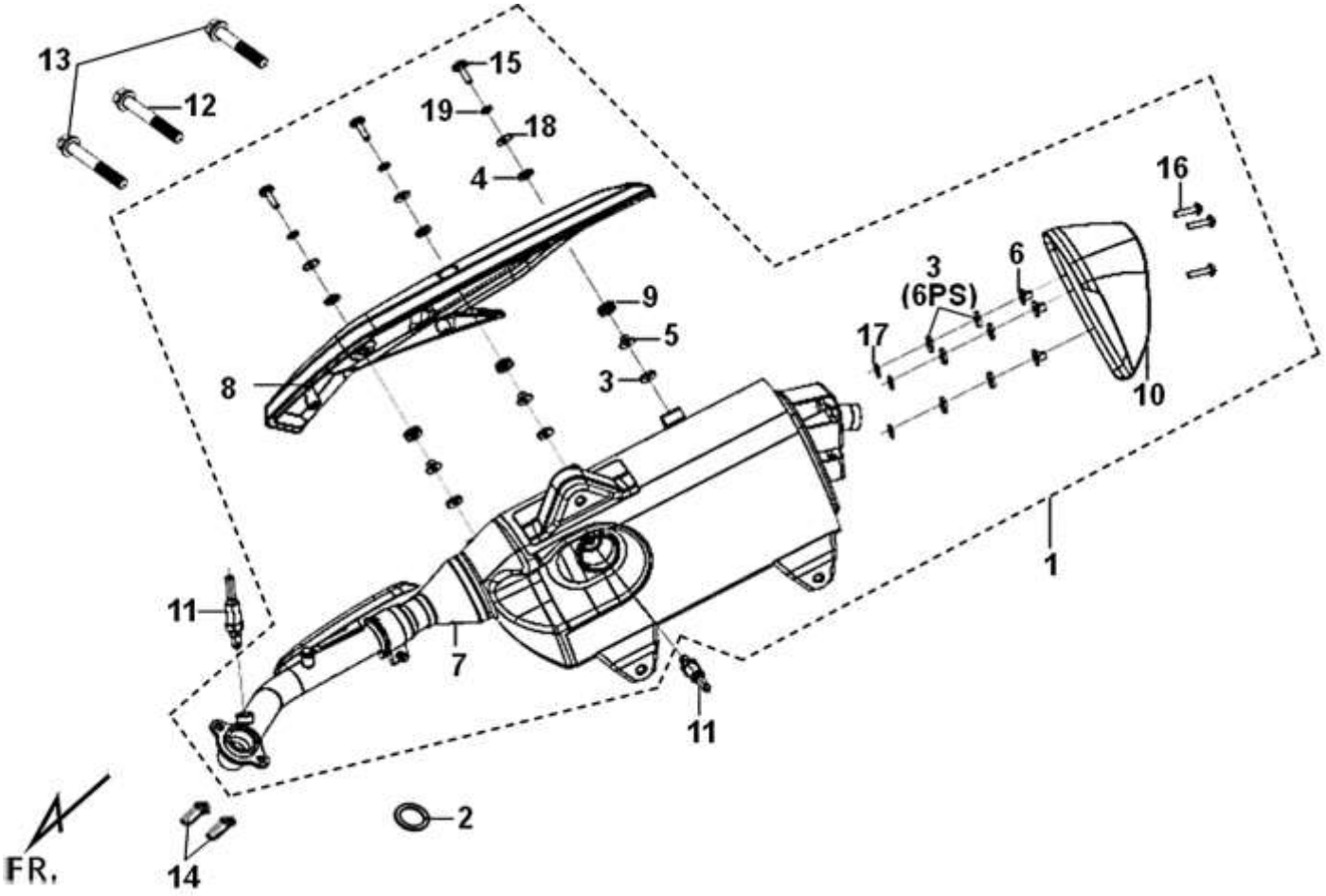

E18		TEA25T1CN-TRC(ZJ1/ ADXTG)	
EGSOZ			
NO	STOK KODU	ACIKLAMA	ADET
01	18000-ZJ1-000-K	EGSOZ KOMPLE SET	1
02	18291-H9A-000	CONTASI EGSOZ CONTASI ADET_(PKT5)	1
03	18292-A6A-000	ORINGPUL EGSOZ KORUCUYUSU KORUMA CONTASI	9
04	18293-F7S-000	ORINGPUL EGSOZ KORUCUYUSU KORUMA CONTASI	3
05	18295-T3C-A00	BURCU EGSOZ BILEZIK YUZUK ADET_(PKT5)	3
06	18295-LA2-000	BURCU EGSOZ BILEZIK YUZUK ADET_(PKT5)	3
07	18300-ZJ1-000	EGSOZ CIPLAK	1
08	18317-ZM1-000	EGSOZ KORUMASI	1
09	18321-L1A-000	TAKOZ EGSOZ KORUCUYU KORUMA KAUCUK LASTIK ADET_(PKT5)	3
10	18328-ZM1-000	EGSOZ KORUMASI ARKA	1
11	37890-XVA-000	O2 OKSIJEN SENSORU	2
12	90001-J01-000	CIVATA M10*60 EGSOZ CIVATASI ADET_(PKT5)	1
13	90002-J01-000	CIVATA M10*50 EGSOZ CIVATASI ADET_(PKT5)	2
14	90043-HMA-000	SOMUN 8MM EGSOZ SOMUNU ADET_(PKT5)	2
15	90116-L4A-000	CIVATA M6*22 EGSOZ CIVATASI_(96001-06022-00)_ADET_(PKT5)	3
16	90116-L5B-000	CIVATA SPECIAL M6*25	3

17	90555-AMA-000	ORINGPUL EGSOZ PULU F ADET_(PKT5)	3	
18	94101-06700	ORINGPUL 12MM EGSOZ DUZ PULU ADET_(PKT5)	3	
19	94111-06700	YAYI ORINGPUL KESIK KALIN EGSOZ 6MM YAYI ADET_(PKT5)	3	

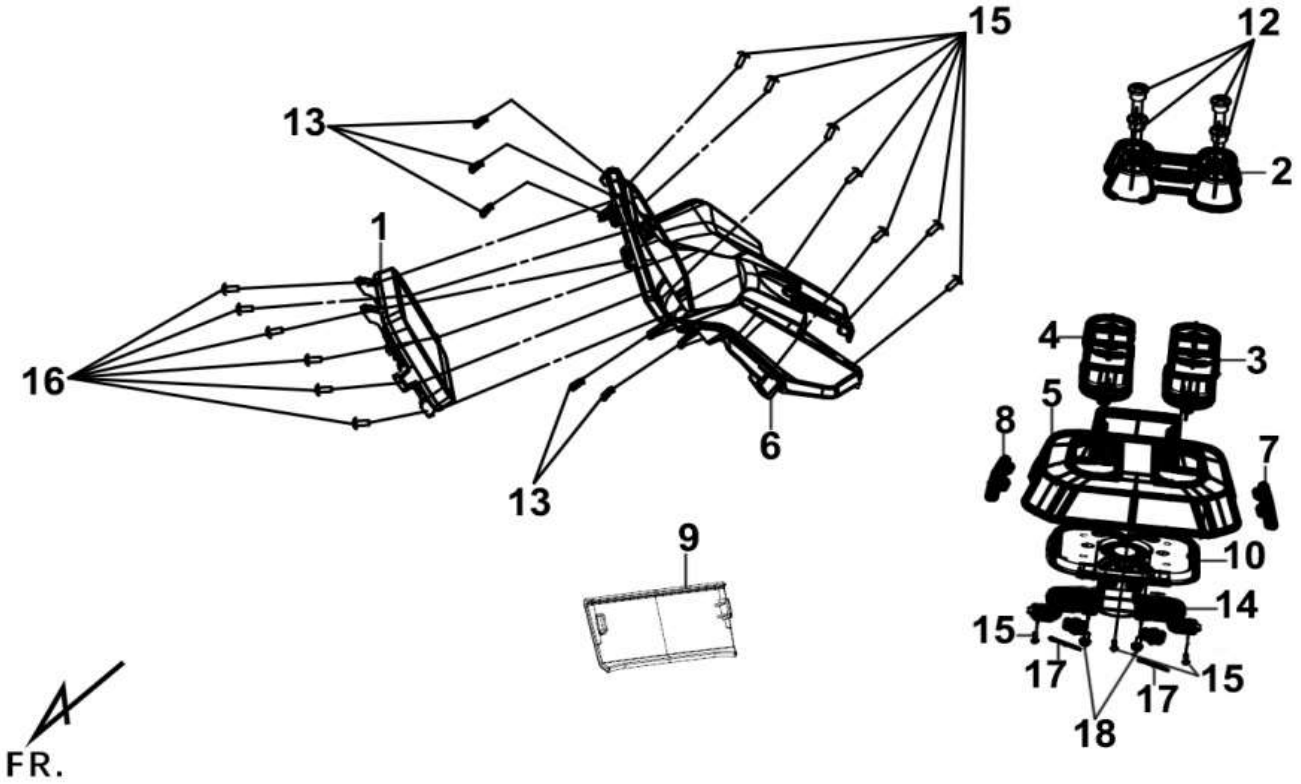

F01		TEA25T1CN-TRC(ZJ1/ ADXTG)		
KM SAATI - KM SAAT GIDON KAPAGI				
NO	STOK KODU	ACIKLAMA	ADET	
01	37200-ZM2-100	KM_SAATI GOSTERGE	1	
02	53131-ZM1-000-S1	BRAKETI GRNJ FAR CERCEVE PLAKASI	1	
03	53132-ZM1-000-S1	BRAKETI GRNJ FAR CERCEVE PLAKASI SAG(R	1	
04	53133-ZM1-000-S1	BRAKETI GRNJ FAR CERCEVE PLAKASI SOL(L_)	1	
05	53205-ZM1-000-S1	GRNJ ON GIDON KAPAK ON (S-881S)	1	
06	53207-ZM1-000	KM_SAATI GOSTERGE VIZORU	1	
07	53211-ZM1-000-S1	GIDON FURJ ALT SAG(R_)_A(S-881 S)	1	
08	53212-ZM1-000-S1	GIDON FURJ ALT SOL(L_)_A(S-881 S)	1	
09	53213-ZM1-000-S1	GIDON FURJ ALT B(S-881 S)	1	
10	53231-ZM1-000	GIDON UST TABLA	1	
11	53232-ZM1-000	BRAKETI TUTUCU SAC BRAKETI	1	
12	90116-ZM1-000	CIVATA SPECIAL M8	4	
13	90302-SA4-900	SOMUN 4MM SAC BAGLANTI SAC SOMUNU.90302SA4010	5	
14	90309-M9Q-000	SOMUN 6MM EGSOZ SOMUNU.90309428731KD	2	
15	93903-34370	CIVATA M4*12 IC KUTUSU CIVATASI	10	

16	93903-35370	CIVATA M5*16 ON KAPAGI KUTUSU CIVATASI	6	
17	94201-16150	PIMI ANA SEHPA(ORTA) DURDURUCU UZUN MILI PIMI	2	
18	95801-06012-07	CIVATA M6*12 SELE KOLTUK .CIVATASI	2	

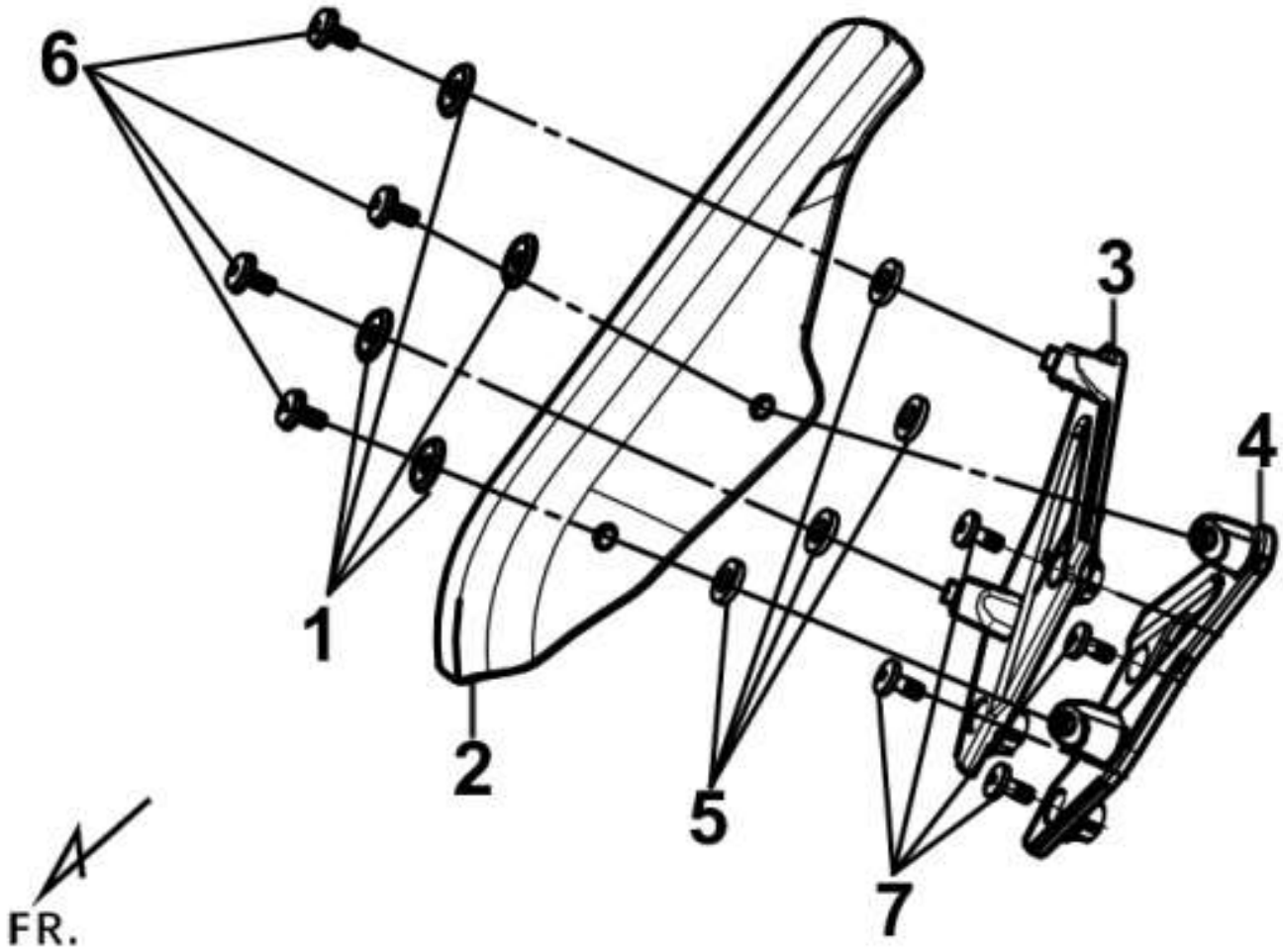

F02		TEA25T1CN-TRC(ZJ1/ ADXTG)		
SIPERLIK				
NO	STOK KODU	ACIKLAMA	ADET	
01	53272-ALA-000	KELEPCE KLIPS GROMET SIPERLIK	4	
02	67100-ZM1-000-K	ACS_SIPERLIK RUZGARLIK CAMI EKRANI SIYAH(BK-001C)(67100-ZM1-000)	1	
03	67101-ZHA-000-SV	BRAKETI SIPERLIK ON IC UZUN BAGLANTI APARATI BRAKETI SAG(R_)	1	
04	67102-ZHA-000-SV	BRAKETI SIPERLIK ON IC UZUN BAGLANTI APARATI BRAKETI SOL(L_)	1	
05	77226-M3F-000	BURCU SIPERLIK ON CAM BAGLANTI LASTIK BURCU ADET_(PKT5)	4	
06	90110-H6T-000	CIVATA M6*14 SIPERLIK RUZGARLIK CIVATASI ADET_(PKT6)	4	
07	96700-06022-49	CIVATA M6*22 SIPERLIK RUZGARLIK CIVATASI	4	

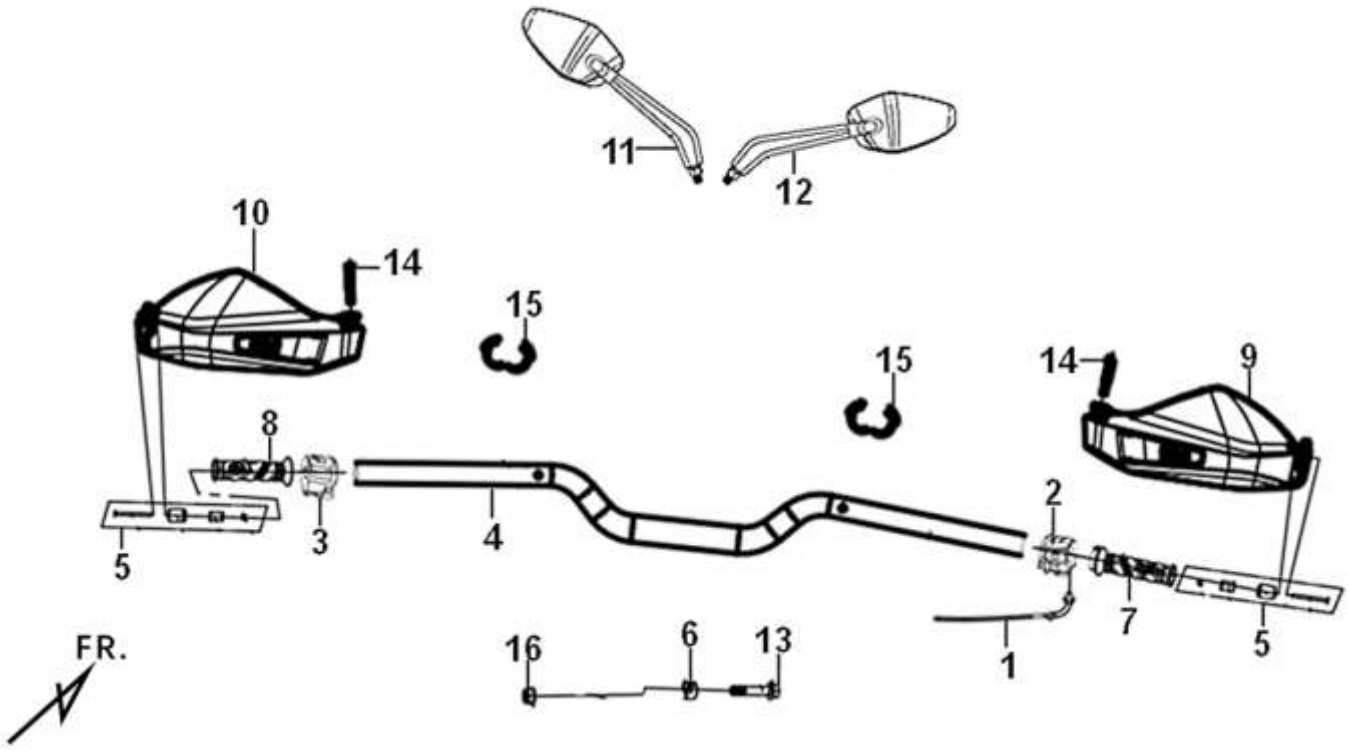

F03		TEA25T1CN-TRC(ZJ1/ ADXTG)		
GIDON				
NO	STOK KODU	ACIKLAMA	ADET	
01	17910-ZM1-000	KMT KARBURATOR KUMANDA GAZ TELI	1	
02	35150-ZM2-000	GIDON KUMANDA KUTUK SAG(R_)	1	
03	35200-ZM1-000	GIDON KUMANDA KUTUK SOL(L_)	1	
04	53100-ZM1-000-S1	GIDON DIREKSION BORUSU	1	
05	53104-ZM1-000	GIDON ELCIK TOPUZU	2	
06	53125-M9Q-000	BURCU GIDON FURJGIDON SABITLE BURCU	1	
07	53140-XTA-000	AS.GIDON ELCIK GAZ LST.HANDLE GRIP SAG R.	1	
08	53166-XTA-000	AS.GIDON ELCIK LASTIGI LST.HANDLE GRIP SOL	1	
09	53208-ZM1-000	GIDON ELCIK KORUMA SAG(R_)	1	
10	53209-ZM1-000	GIDON ELCIK KORUMA SOL(L_)	1	
11	88110-ZJA-000	AYNA SAG(R_)	1	
12	88120-ZJA-000	AYNA SOL(L_)	1	
13	90106-TAA-000	CIVATA M10*50 GIDON KUMANDA KABLO CIVATASI_(90106-M9Q-000)_ADET_(PKT5)	1	
14	90114-AWU-000	CIVATA FREN SEVIYE AYARLAMA	2	
15	90115-ZM1-000	BRAKETI KEPGIDON TUTUCU BAGLANTI	2	
16	90304-M9Q-000-TW	SOMUN 10MM MOTOR ASKISI SOMUNU	1	

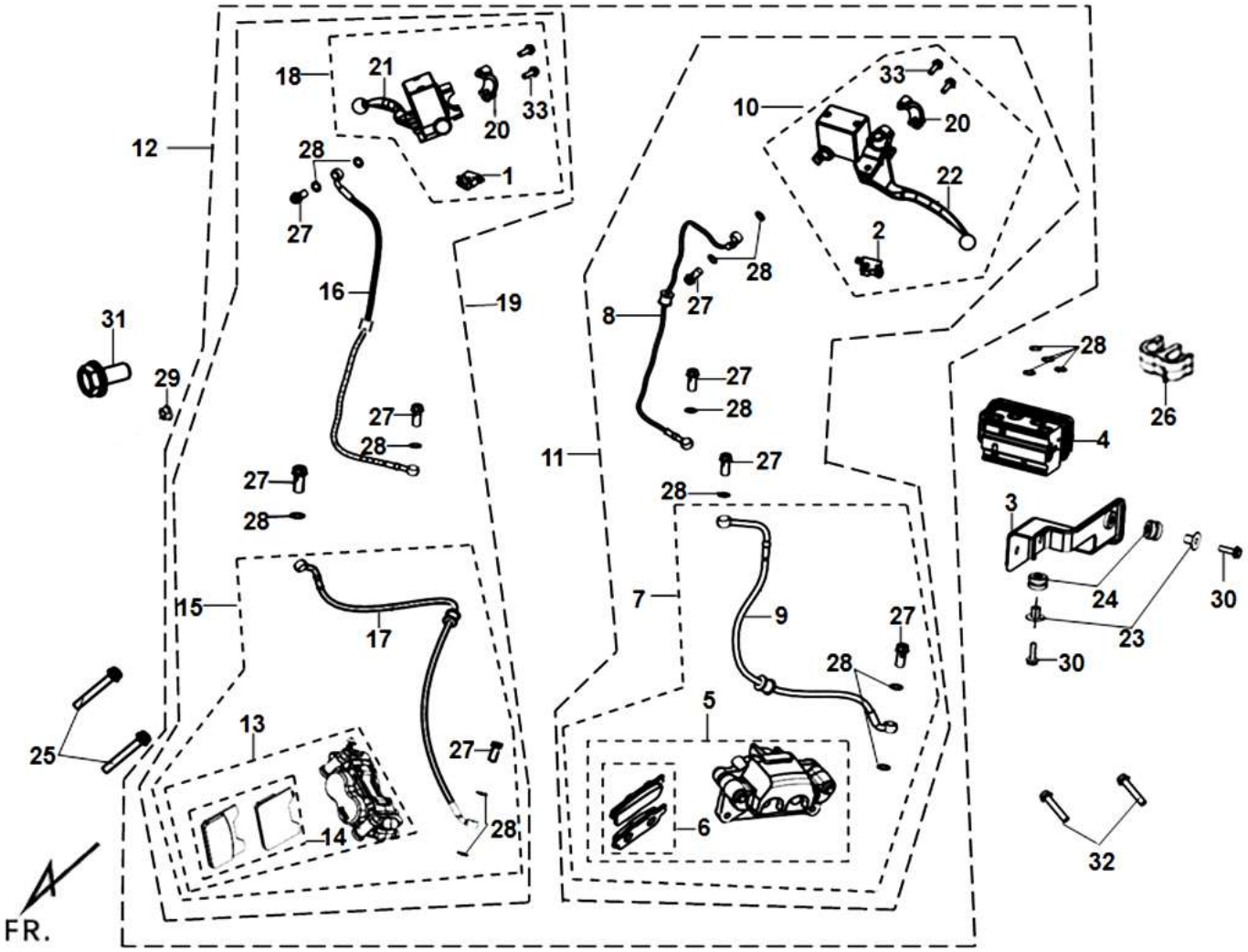

F04		TEA25T1CN-TRC(ZJ1/ ADXTG)	
FREN SISTEMI			
NO	STOK KODU	ACIKLAMA	ADET
01	35340-L6C-000	AS.MUSUR FREN MUSURU FREN STOP.ON	1
02	35350-L6C-000	AS.MUSUR FREN MUSURU FREN STOPARKA	1
03	38731-ZM1-000	BRAKETI FREN ABS HIDROLIK DEVRE UNITESI BRAKETI	1
04	3873B-ZM1-000	FREN ABS HIDROLIK DEVRE UNITESI	1
05	43100-L3A-010	FREN KALIPER ARKA FREN ALT ARKA(43100-L3A-010-KB)	1
06	43105-L3A-010	FREN BALATASI DISK BALATA 2PCS/1.43105ARB000 .ARKA A.SET 5PCS/1SET.	1
07	4310A-ZM1-000	FREN KALIPER ARKA FREN ALT ARKA	1
08	43126-ZM1-000	FREN HORTUMU ON OZEL CELIK SYM A ARKA	1
09	43127-ZM1-000	FREN HORTUMU ARKA OZEL CELIK SYM B ARKA	1
10	43500-ZM1-000	FREN UST MERKEZ ARKA FREN KOLLU M/C ARKA	1
11	4350A-ZM1-000	FREN SISTEMI ARKA	1
12	4500A-ZM1-000-K	FREN ON SISTEMI	1
13	45100-L9F-000	FREN ON ALT MERKEZ ON	1
14	45105-L9F-000	FREN BALATASI DISK BALATA ON	2

15	**4510A-ZM1-000**	**FREN MERKEZI ALT KISA ALCAK COMP**	**1**	
16	**45126-ZM1-000**	**FREN HORTUMU ON A**	**1**	
17	**45127-ZM1-000**	**FREN HORTUMU ON B**	**1**	
18	**45500-ZM1-000**	**FREN KALIPER UST MERKEZ ON**	**1**	
19	**4550A-ZM1-000**	**FREN UST MERKEZ ON**	**1**	
20	**45517-TFA-000**	**KELEPCE FREN UST MERKEZ GIDON BAGLANTI KELEPCESI**	**2**	
21	**53175-HMA-000-XS**	**AS.FREN KOLU SAGTARAF R HANDLE LEVER STEERING ON SAG**	**1**	
22	**53178-HMA-000-XS**	**FREN KOLU SOLTARAF L HANDLE LEVER STEERING ARKA SOL (L_) (53178-HMA-000-BT) RR(ARKA).SOL(L.)**	**1**	
23	**61201-B9A-000**	**TAPA KM SAAT BAGLANTI BRAKETI TAPASI**	**2**	
24	**64304-B9A-000**	**ORINGPUL KM SAAT BAGLANTI BRAKETI LASTIGI ON SAG(R_)**	**2**	
25	**90102-L4A-000**	**CIVATA M10*65 FREN SISTEMI ON _ARKA CIVATASI ADET_(PKT5)**	**2**	
26	**90118-L4G-000**	**KELEPCE GIDON BORU TUPU KELEPCESI**	**4**	
27	**90145-M9Q-800**	**CIVATA M10*22_YAG**	**8**	
28	**90545-M9Q-000**	**ORINGPUL FREN ORINGPUL ON**	**16**	
29	**94050-06070**	**SOMUN 6MM CAMURLUK ON SOMUNU**	**1**	
30	**95801-06020-07**	**CIVATA M6*20 FREN SISTEMI ON _ARKA CIVATASI ADET_(PKT5)**	**2**	

31	**95801-08014-07**	**CIVATA M8*14 FREN SISTEMI ON _ARKA CIVATASI_(93404-08014-07)_ADET_(PKT5)**	**1**
32	**95801-J01-000**	**CIVATA M8*45 FREN SISTEMI ON _ARKA CIVATASI**	**2**
33	**96700-06022-49**	**CIVATA M6*22 SIPERLIK RUZGARLIK CIVATASI**	**4**

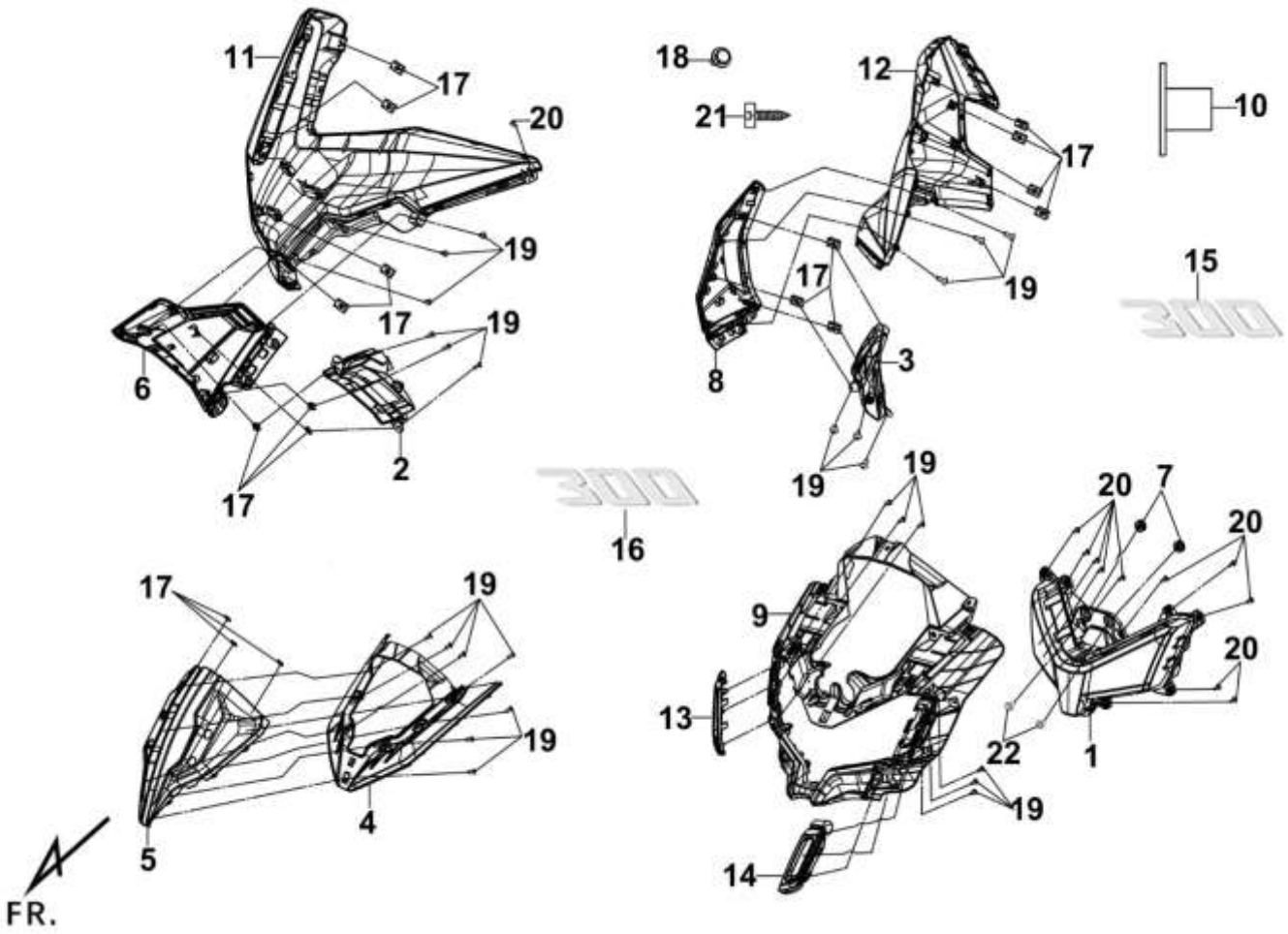

F05		TEA25T1CN-TRC(ZJ1/ ADXTG)	
ON FAR - ON GRENAJ			
NO	STOK KODU	ACIKLAMA	ADET
01	33100-ZM1-000	AYDINLATMA ON FAR_(HEAD LIGHT)	1
02	33400-ZM1-000	AYDINLATMA SINYAL SAG(R_)	1
03	33450-ZM1-000	AYDINLATMA SINYAL SOL(L_)	1
04	64301-ZM1-000-AQ	GRNJ ON GRNJI (GY-7547UL)	1
04	64301-ZM1-000-AR	GRNJ ON GRNJI (GY-008C)	1
04	64301-ZM1-000-AT	GRNJ ON GRNJI_GUMUS	1
04	64301-ZM1-000-KC	GRNJ ON GRNJI (BK-007U)	1
04	64301-ZM1-000-WF	GRNJ ON GRNJI (WH-006U)	1
05	64302-ZM1-000	GRNJ ON UCGEN PARCA KAPAGI ON	1
06	64303-ZM1-000-AE	GRNJ ON ALTI ON SAG(R_)(GY-7450U)	1
06	64303-ZM1-000-AE	GRNJ ON ALTI ON SAG(R_)(GY-7450U)	1
06	64303-ZM1-000-AE	GRNJ ON ALTI ON SAG(R_)(GY-7450U)	1
06	64303-ZM1-000-AE	GRNJ ON ALTI ON SAG(R_)(GY-7450U)	1
06	64303-ZM1-000-AT	GRNJ ON ALTI ON SAG(R_)(BK-2593U)	1
07	64304-X01-000	TAKOZ ON KAUCUGU ON SAG R. *ADET.PKT6	2
08	64304-ZM1-000-AE	GRNJ ON ALTI ON SOL(L_)(GY-7450U)	1

08	64304-ZM1-000-AE	GRNJ ON ALTI ON SOL(L_)(GY-7450U)	1	
08	64304-ZM1-000-AE	GRNJ ON ALTI ON SOL(L_)(GY-7450U)	1	
08	64304-ZM1-000-AE	GRNJ ON ALTI ON SOL(L_)(GY-7450U)	1	
08	64304-ZM1-000-AT	GRNJ ON ALTI ON SOL(L_)(BK-2593U)	1	
09	64305-ZM1-000-K	GRNJ ON ALT(BK-001C)	1	
10	64306-X01-000	BURCU ON KAPAGI BILEZIK YUZUK ON	2	
11	64306-ZM1-000-AQ	GRNJ ON KISIM YAN FR_KAPAGI DEKR ON SAG(R_)(GY-7547UL)	1	
11	64306-ZM1-000-AR	GRNJ ON KISIM YAN FR_KAPAGI DEKR ON SAG(R_)(GY-008C)	1	
11	64306-ZM1-000-AT	GRNJ ON KISIM YAN FR_KAPAGI DEKR ON SAG(R_)(BK-2593U)	1	
11	64306-ZM1-000-KC	GRNJ ON KISIM YAN FR_KAPAGI DEKR ON SAG(R_)(BK-007U)	1	
11	64306-ZM1-000-WF	GRNJ ON KISIM YAN FR_KAPAGI DEKR ON SAG(R_)(WH-006U)	1	
12	64307-ZM1-000-AQ	GRNJ ON KISIM YAN FR_KAPAGI DEKR ON SOL(L_)(GY-7547UL)	1	
12	64307-ZM1-000-AR	GRNJ ON KISIM YAN FR_KAPAGI DEKR ON SOL(L_)(GY-008C)	1	
12	64307-ZM1-000-AT	GRNJ ON KISIM YAN FR_KAPAGI DEKR ON SOL(L_)(BK-2593U)	1	
12	64307-ZM1-000-KC	GRNJ ON KISIM YAN FR_KAPAGI DEKR ON SOL(L_)(BK-007U)	1	
12	64307-ZM1-000-WF	GRNJ ON KISIM YAN FR_KAPAGI DEKR ON SOL(L_)(WH-006U)	1	
13	64308-ZM1-000	GRNJ MERKEZ ON ALT KISA ALCAK KAPAGI ON SAG(R_)	1	
14	64309-ZM1-000	GRNJ MERKEZ ON ALT KISA ALCAK KAPAGI ON SAG(R_)	1	
15	87123-ZJ1-000	STICKER	1	
16	87124-ZJ1-000	STICKER	1	
17	90302-SA4-900	SOMUN 4MM SAC BAGLANTI SAC SOMUNU.90302SA4010	23	
18	93404-06016-07	CIVATA M6*16 CAMURLUK ARKA CIVATASI	2	
19	93903-34370	CIVATA M4*12 IC KUTUSU CIVATASI	25	
20	93903-35370	CIVATA M5*16 ON KAPAGI KUTUSU CIVATASI	14	
21	93903-ZM1-000	CIVATA 4*16	3	
22	95801-06022-07	CIVATA M6*22 SIPERLIK RUZGARLIK CIVATASI	2	

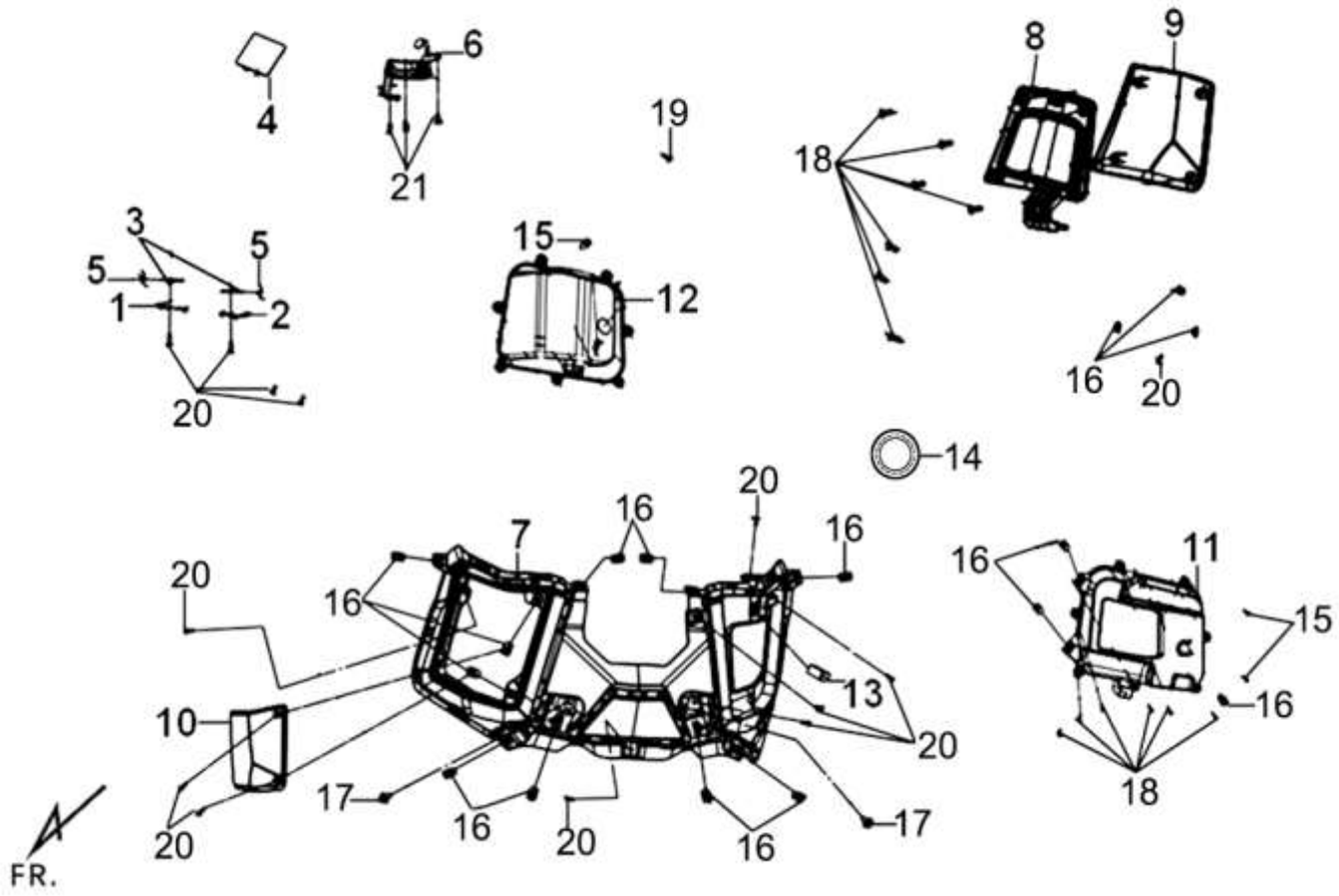

F06		TEA25T1CN-TRC(ZJ1/ ADXTG)	
TORPIDO			
NO	**STOK KODU**	**ACIKLAMA**	**ADET**
01	**64315-L9M-000**	**BRAKETI AYAK BASMA ORTA PANEL KAPAGI MENENTESE BRAKETI SAG R.ADET.**	**1**
02	**64316-L9M-000**	**BRAKETI AYAK BASMA ORTA PANEL KAPAGI MENENTESE BRAKETI SOL L.ADET.**	**1**
03	**64317-L9M-000**	**PIMI AYAK BASMA ORTA PANEL KAPAGI MENENTESE PIMI SOL L**	**2**
04	**64318-L3A-000**	**RADYATOR YEDEK SU DEPO KAPAGI SOL(L_)**	**1**
05	**64319-ZM1-000**	**YAKIT YAYI FUEL LID SPRING**	**2**
06	**64320-L9M-000-TW**	**YAKIT KILIT MEKANIZMASI**	**1**
07	**81131-ZM1-000**	**GRNJ KABIN ON TORPIDO**	**1**
08	**81133-ZM1-000**	**GRNJ ON KABIN KAPAGI TAKVIYESI**	**1**
09	**81134-ZM1-000**	**GRNJ ON KABIN KAPAGI**	**1**
10	**81135-ZM1-000**	**AKU YUVASI KUTUSU KAPAGI**	**1**
11	**81136-ZM1-000**	**GRNJ ON IC TARAF KUTUSU KAPAGI ALT KAPAGI (A)**	**1**
12	**81137-ZM1-000**	**GRNJ ON IC TARAF KUTUSU KAPAGI ALT KAPAGI (B)**	**1**
13	**81140-XN1-000-TW**	**GRNJ ON IC TARAF KUTUSU KAPAGI TUTUCU ON**	**1**
14	**83502-T3D-K00**	**TAPA CANTA KAPAGI TAPASI ARKA**	**1**
15	**90110-HJC-000**	**CIVATA M6*12 ADET_(PKT5)**	**2**

16	**90302-SA4-900**	**SOMUN 4MM SAC BAGLANTI SAC SOMUNU.90302SA4010**	**17**	
17	**93404-06012-07**	**CIVATA M6*12 RADYATOR CIVATASI ADET_(PKT5)**	**2**	
18	**93903-34370**	**CIVATA M4*12 IC KUTUSU CIVATASI**	**14**	
19	**93903-44380**	**CIVATA M4*12 ADET_(PKT5)**	**2**	
20	**93903-44470**	**CIVATA M4*16 IC KUTUSU CIVATASI**	**13**	
21	**95801-06012-07**	**CIVATA M6*12 SELE KOLTUK .CIVATASI**	**3**	

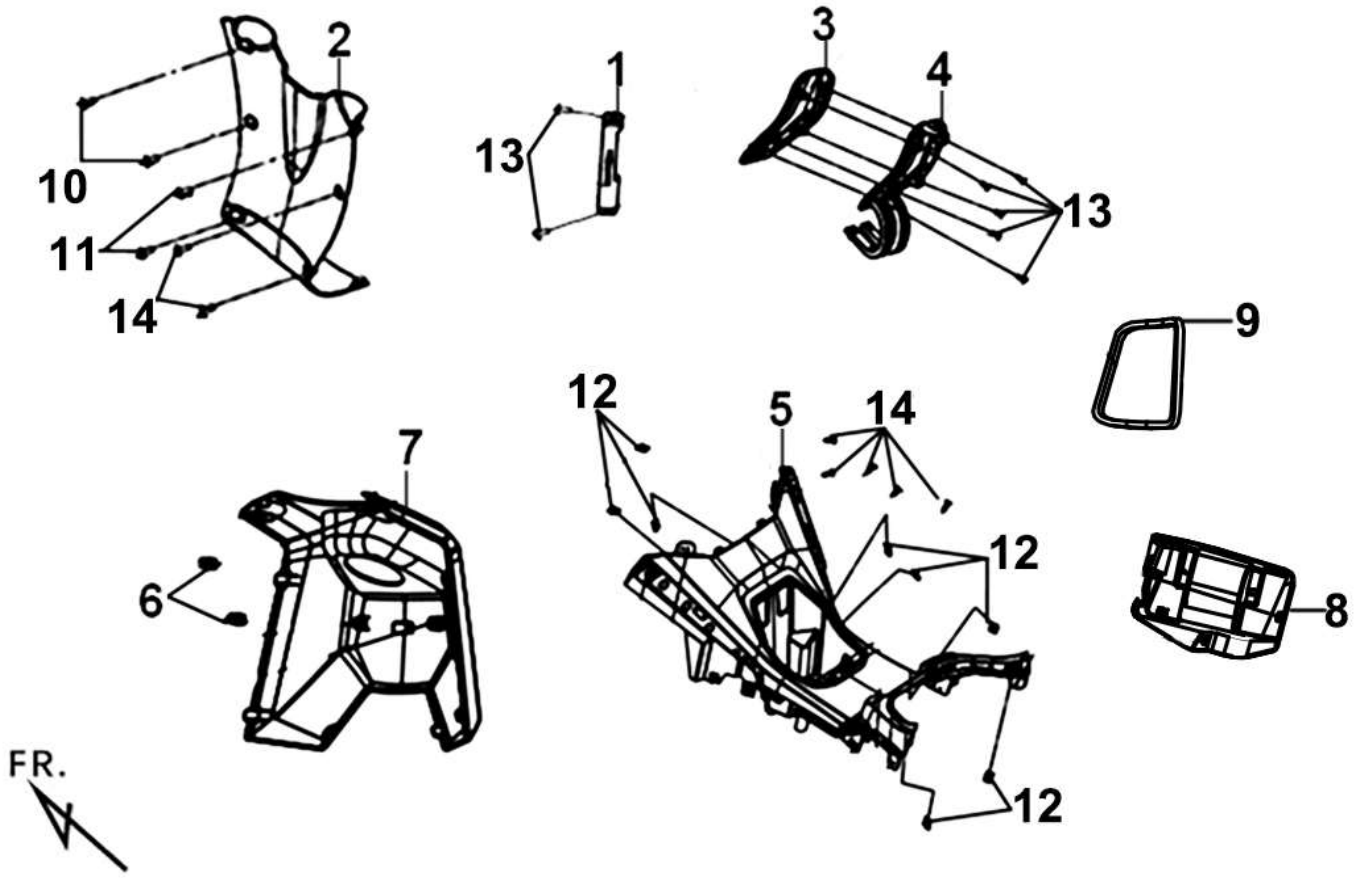

F07		**TEA25T1CN-TRC(ZJ1/ ADXTG)**		
IC TORPIDO				
NO	**STOK KODU**	**ACIKLAMA**	**ADET**	
01	**35600-ZGA-000**	**ESTELASYON**	**1**	
02	**64300-ZM1-000**	**UNDER_SPOLIER**	**1**	
03	**64311-ZM1-000**	**YAKIT KAPAGI UST KAPAK**	**1**	
04	**64312-ZM1-000**	**YAKIT KAPAGI TAKVIYESI MENTESE**	**1**	
05	**64313-ZM1-000**	**YAKIT DEPO KAPAGI KORUMASI GRNJI**	**1**	
06	**77405-L4A-000-TW**	**KELEPCE**	**2**	
07	**81132-ZM1-000-AQ**	**GRNJ ON IC KOKPIT(GY-7547UL)**	**1**	
07	**81132-ZM1-000-AR**	**GRNJ ON IC KOKPIT(GY-008C)**	**1**	
07	**81132-ZM1-000-AT**	**GRNJ ON IC KOKPIT(BK-2593U)**	**1**	
07	**81132-ZM1-000-KC**	**GRNJ ON IC KOKPIT(BK-007U)**	**1**	

07	**81132-ZM1-000-WF**	**GRNJ ON IC KOKPIT(WH-006U)**	**1**	
08	**81138-ZM1-000**	**GRNJ ON IC TARAF KUTUSU KAPAGI ALT KAPAGI (C)**	**1**	
09	**81147-ZM1-000**	**KECE ON IC TARAF ON TORPIDO ON KAPAGI KUTUSU KECESI (A)**	**1**	
10	**90110-HJC-000**	**CIVATA M6*12 ADET_(PKT5)**	**2**	
11	**90115-REA-000-TW**	**SOMUN 6MM KAPAGI SOMUNU**	**2**	
12	**90302-SA4-900**	**SOMUN 4MM SAC BAGLANTI SAC SOMUNU.90302SA4010**	**11**	
13	**93903-34370**	**CIVATA M4*12 IC KUTUSU CIVATASI**	**7**	
14	**93903-44470**	**CIVATA M4*16 IC KUTUSU CIVATASI**	**20**	

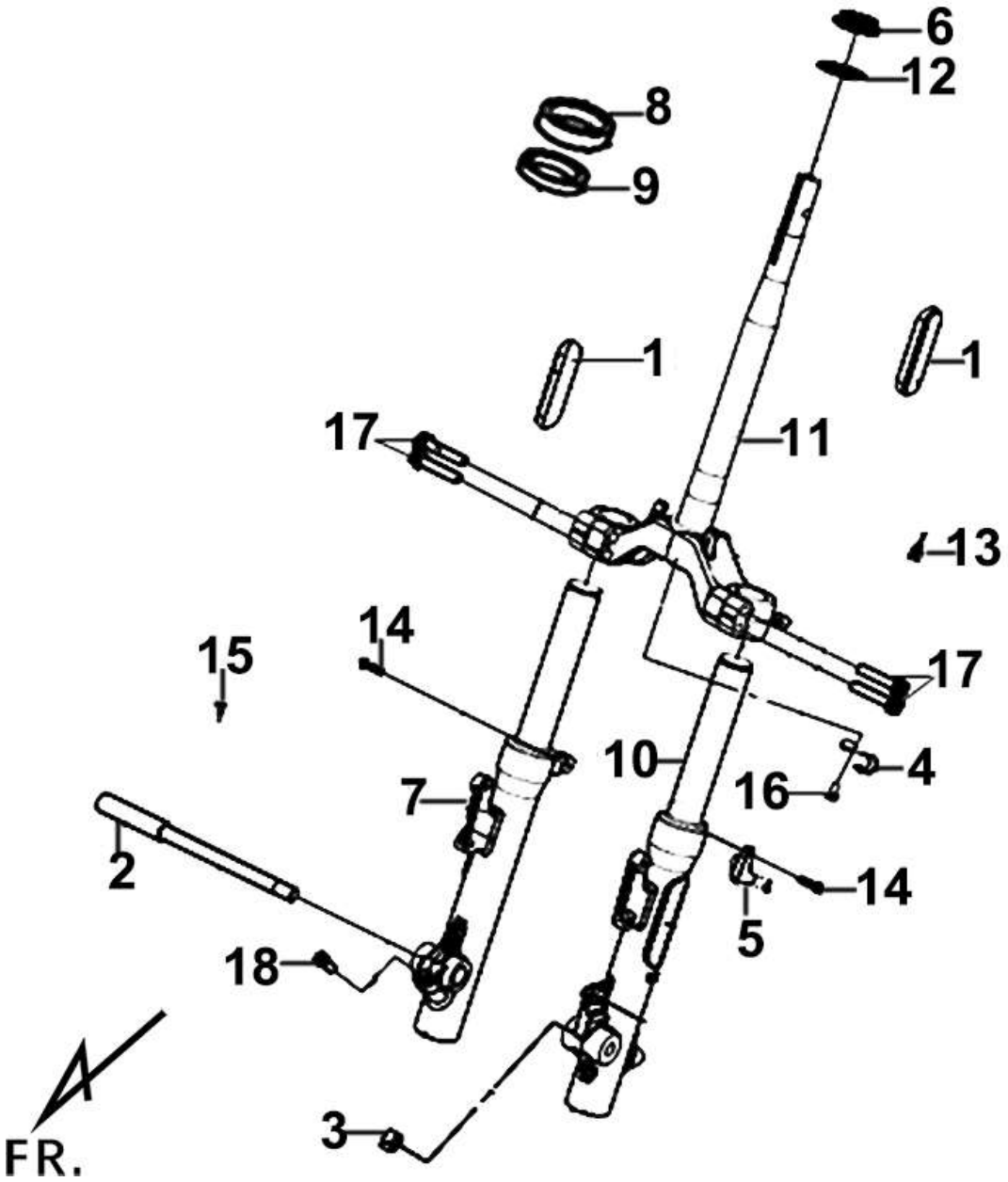

F08		**TEA25T1CN-TRC(ZJ1/ ADXTG)**	
ON AMORTISOR - ON MASA			
NO	**STOK KODU**	**ACIKLAMA**	**ADET**

01	33742-X8A-000	AYDINLATMA.REFLEKTOR ON SAG R. */ SOL L*	2	
02	44301-L3A-000-TW	CIVATA MIL JANT ON TEKER MILI ON	1	
03	44311-L3A-000	BURCU JANT ON TEKER BURCU ON	1	
04	45157-J01-000	KELEPCE FREN HORTUMU KELEPCESI A	1	
05	45158-J01-000	KELEPCE FREN HORTUMU KELEPCESI B	1	
06	50305-L4A-000	SOMUN GIDON FURJ KONTRA UST SOMUNU	1	
07	51400-ZM1-900-K	ON DUZEN AMORTISOR BORU SAG	1	
08	51423-J04-000	KECE GIDON YAG GIDON KUMANDA KABLO KECESI	2	
09	51425-J04-900	KECE TOZ KECESI	2	
10	51500-ZM1-900-K	ON DUZEN AMORTISOR BORU SOL	1	
11	53200-ZM1-000	ON DUZEN ALT PLATIN UCGEN DIK BORU ONMASA	1	
12	53214-L4A-000	KECE GIDON FURJ ALT GIDON KUMANDA KABLO KECESI	1	
13	90302-M9Q-000	CIVATA M5*12 CAMURLUK ON CIVATASI	2	
14	93891-06028-07	CIVATA 6*28	2	
15	93903-44470	CIVATA M4*16 IC KUTUSU CIVATASI	2	
16	95801-06012-07	CIVATA M6*12 SELE KOLTUK .CIVATASI	1	
17	95801-10045-07	CIVATA M10*45 GIDON KUMANDA KABLO CIVATASI ADET_(PKT5)	4	
18	96700-08020-00	CIVATA M8*20 GIDON KUMANDA KABLO CIVATASI ADET_(PKT5)	1	

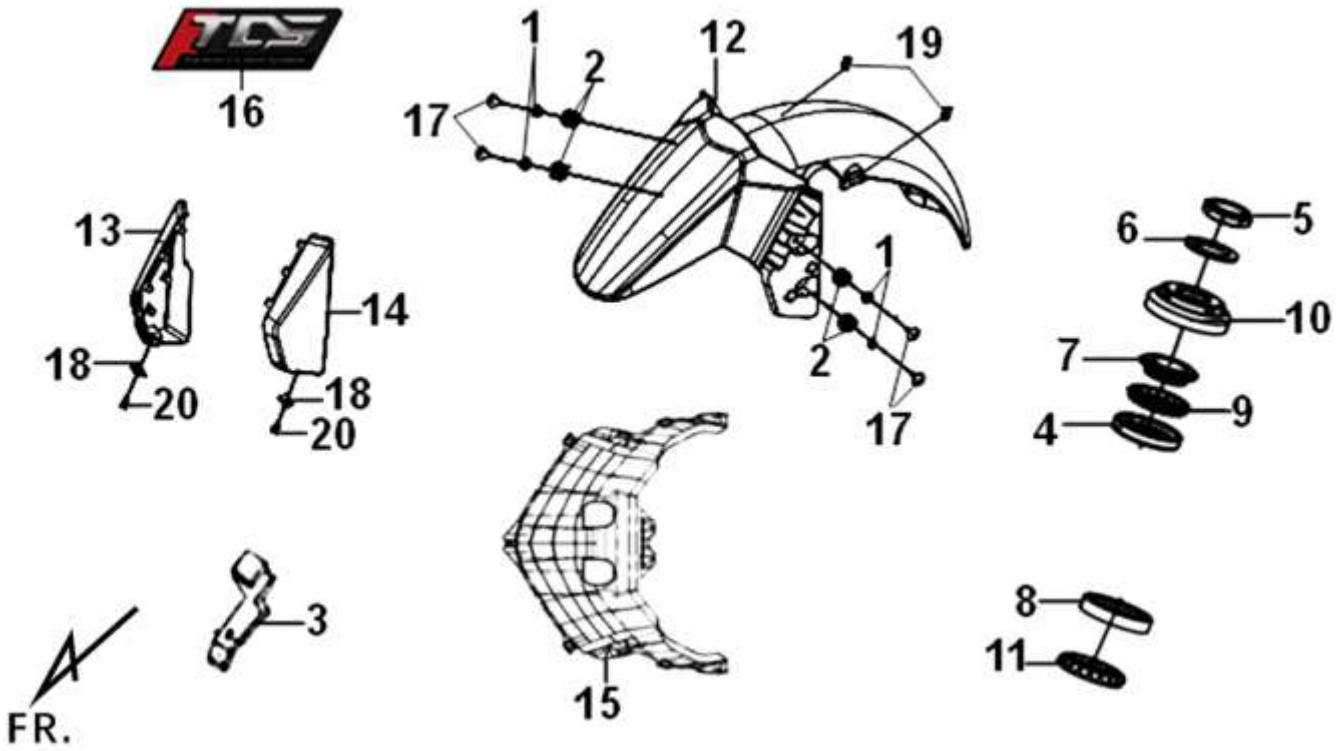

F09		TEA25T1CN-TRC(ZJ1/ ADXTG)	
ON CAMURLUK			
NO	STOK KODU	ACIKLAMA	ADET
01	18295-T3C-A00	BURCU EGSOZ BILEZIK YUZUK ADET_(PKT5)	4
02	18320-F3E-000	KELEPCE EGSOZ KORUCUYU KORUMA KAUCUK LASTIK GROMET KELEPCESI	4
03	45156-J01-000	KELEPCE FREN HORTUMU KELEPCESI ON	1
04	50301-HMA-000	GIDON FURJ UST ALT KISIM	1
05	50306-M9Q-000-XS	GIDON SOMUN FURJ KONTRA SOMUNU XS.SIYAH.XS	1
06	50308-HMA-000	ORINGPUL GIDON FURJ ORINGPUL ADET_(PKT5)	1
07	53211-HMA-000	GIDON FURJ UST	1
08	53212-L4A-000	GIDON FURJ ALT	1
09	53215-HMA-000-M2	GIDON FURJ BILYE #5 ASS Y_(53215-HMA-000)	1
10	53220-HMA-000-TW	SOMUN GIDON FURJ ORTA GIDON KUMANDA KABLO SOMUNU	1
11	53225-L4A-000	GIDON FURJ EN ALT ASS Y	1
12	61100-ZM1-000-AQ	CAMURLUK ON KOMP_MATMAVI_ON GY_GRI	1
12	61100-ZM1-000-AR	CAMURLUK ON KOMP_(GY-008C)_ON GY_GRI	1
12	61100-ZM1-000-AT	CAMURLUK ON KOMP_(BK-2593U)_ON COSMICGRI	1
12	61100-ZM1-000-KC	CAMURLUK ON KOMP_(BK-007U)_ON BK_SIYAH	1
12	61100-ZM1-000-WF	CAMURLUK ON KOMP_(WH-006U)_ON BK_SIYAH	1
13	61101-ZM1-000	CAMURLUK ON DEKOR KAPAGI ON SAG(R_)	1
14	61102-ZM1-000	CAMURLUK ON DEKOR KAPAGI ON SOL(L_)	1
15	61103-ZM1-000	CAMURLUK ON IC TARAF	1
16	87160-XTH-000	G.LOGO ETIKET FAR ON KAPAGI STRIPELOGO	1
17	90115-J04-000	CIVATA M6*25 PAN	4
18	90302-SA4-900	SOMUN 4MM SAC BAGLANTI SAC SOMUNU.90302SA4010	3
19	90305-M9Q-000	SOMUN 6MM GIDON KUMANDA KABLO SOMUNU ADET_(PKT5)	2
20	93404-06012-07	CIVATA M6*12 RADYATOR CIVATASI ADET_(PKT5)	2

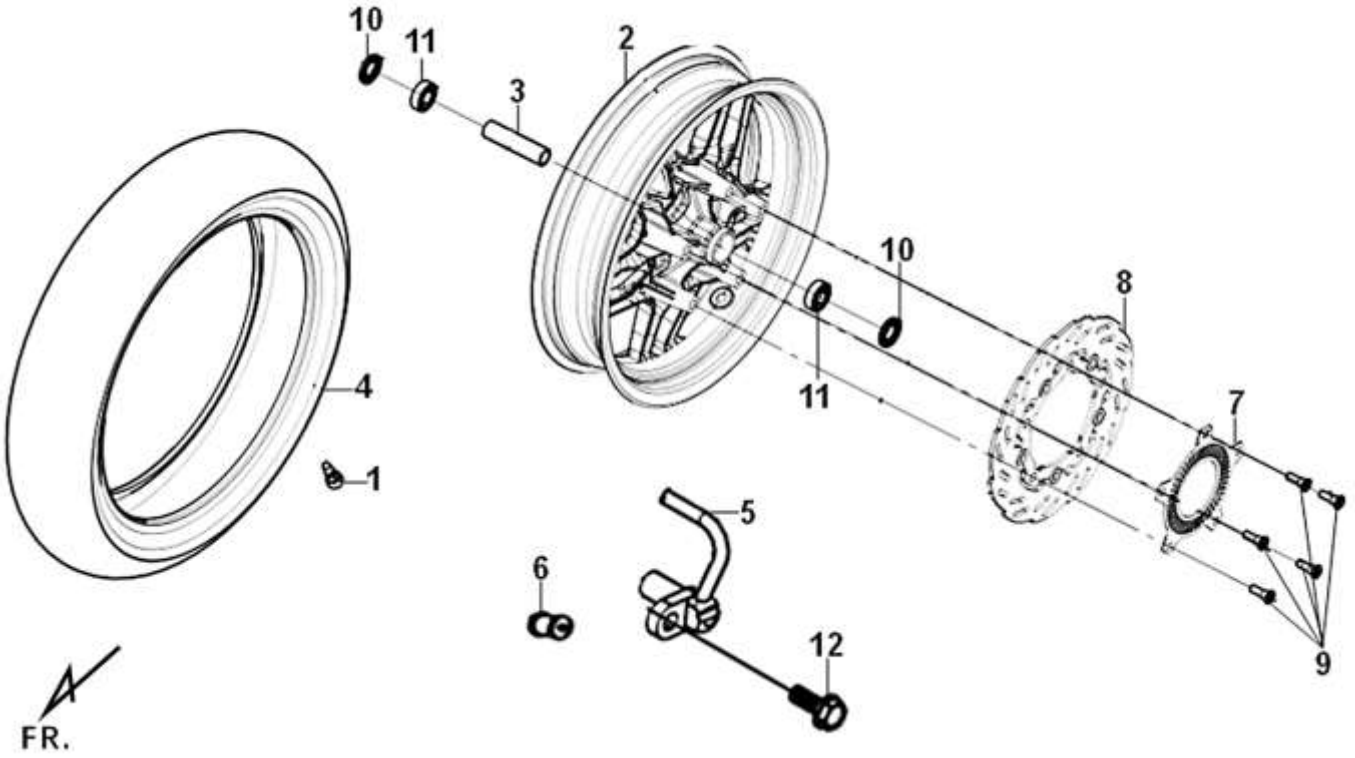

F10		TEA25T1CN-TRC(ZJ1/ ADXTG)	
ON TEKER			
NO	STOK KODU	ACIKLAMA	ADET
01	42753-Z2D-000	AS.DIS JANT SUBABI ARKA/ON	1
02	44600-J01-000-K	ON JANT	1
03	44620-L3A-000	BURCU JANT RULMAN BORUSU ON	1
04	44710-ZM1-000	DIS LASTIK ON	1
05	44870-L4C-000-CN1	KM_SAATI KM_SENSOR_(44870-L4C-000)	1
06	44910-L4C-000	BURCU FREN KAUCUK LASTIK BURCU ADET_(PKT5)	1
07	45120-ZM1-000	FREN ABS TAKIP DETECTIVE DISKI ON	1
08	45121-L9F-000-SB	FREN DISKI ON GUMUS(S-880S)(45121-L9F-000)	1
09	90105-ZHA-000	CIVATA M8*26 FREN JANT DISK CIVATASI ON	5
10	90754-LEA-000	KECE 20 TOZ 20*35 5*5 JANT ON KECESI	2
11	90912-LEA-000	RULMAN 6202 LLU	2
12	96001-06016-07	CIVATA M6*25 ESTELASYON.KABLO DEMETI .CIVATASI	1

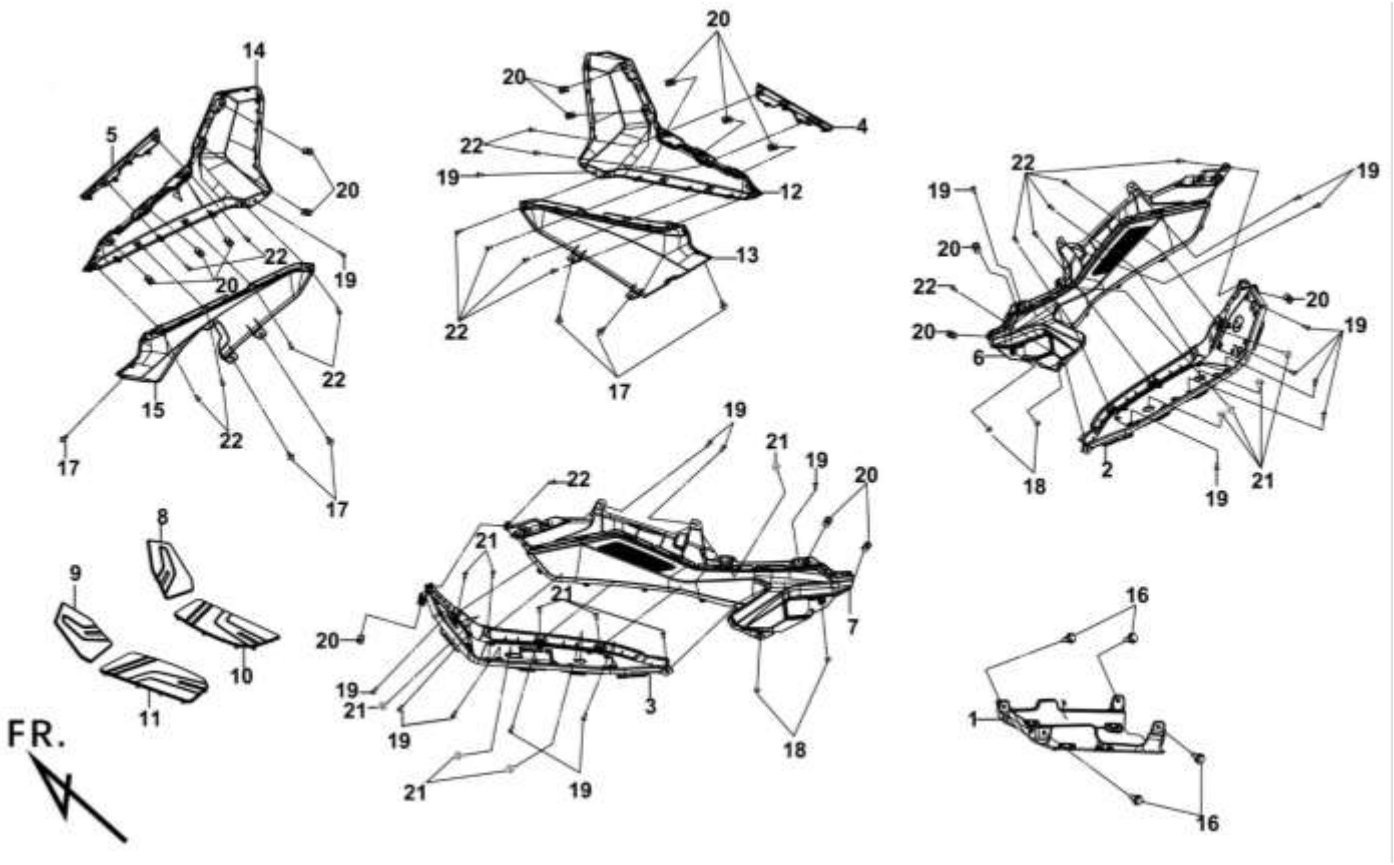

F11		TEA25T1CN-TRC(ZJ1/ ADXTG)		
AYAK BASMA ZEMINI - MARSPIYEL				
NO	STOK KODU	ACIKLAMA	ADET	
01	50611-ZM1-000	GRNJ AYAK BASMA ALTI DALUNBAZ MUHAFAZA	1	
02	64310-ZM1-000	GRNJ SURUCU AYAKBASMA ZEMIN PANEL SAG(R_)	1	
03	64320-ZM1-000	GRNJ SURUCU AYAKBASMA ZEMIN PANEL SOL(L_)	1	
04	64330-ZM1-000-SB	AKU YUVASI KUTUSU KAPAGI SAG(R_)(S-880 S)	1	
05	64340-ZM1-000-SB	AKU YUVASI KUTUSU KAPAGI SOL(L_)(S-880 S)	1	
06	64350-ZM1-000	AKU YUVASI KUTUSU KAPAGI SAG(R_)B	1	
07	64360-ZM1-000	AKU YUVASI KUTUSU KAPAGI SOL(L_)B	1	
08	81141-ZM1-000	GRNJ PASPAS A SAG(R_)	1	
09	81142-ZM1-000	GRNJ PASPAS A SOL(L_)	1	
10	81143-ZM1-000	GRNJ PASPAS B SAG(R_)	1	
11	81144-ZM1-000	GRNJ PASPAS B SOL(L_)	1	
12	83520-ZM1-000	GRNJ YAN TARAF KAPAGI A SAG(R_)	1	
13	83530-ZM1-000	GRNJ YAN TARAF KAPAGI B SAG(R_)	1	
14	83620-ZM1-000	GRNJ YAN TARAF KAPAGI A SOL(L_)	1	
15	83630-ZM1-000	GRNJ YAN TARAF KAPAGI B SOL(L_)	1	
16	90111-M9Q-800-XS	BURCU CIVATA M6* HAVA FILTRESI OZEL CIVATASI XS_SIYAH_XS ADET_(PKT5)	4	
17	90115-REA-000-TW	SOMUN 6MM KAPAGI SOMUNU	6	

18	90118-HAA-000	CIVATA M5*14 KAPAGI CIVATASI_(90118-T15-000)_ADET_(PKT5)	4	
19	93903-44470	CIVATA M4*16 IC KUTUSU CIVATASI	18	
20	90302-SA4-900	SOMUN 4MM SAC BAGLANTI SAC SOMUNU.90302SA4010	16	
21	93404-06012-07	CIVATA M6*12 RADYATOR CIVATASI ADET_(PKT5)	8	
22	93903-34370	CIVATA M4*12 IC KUTUSU CIVATASI	24	

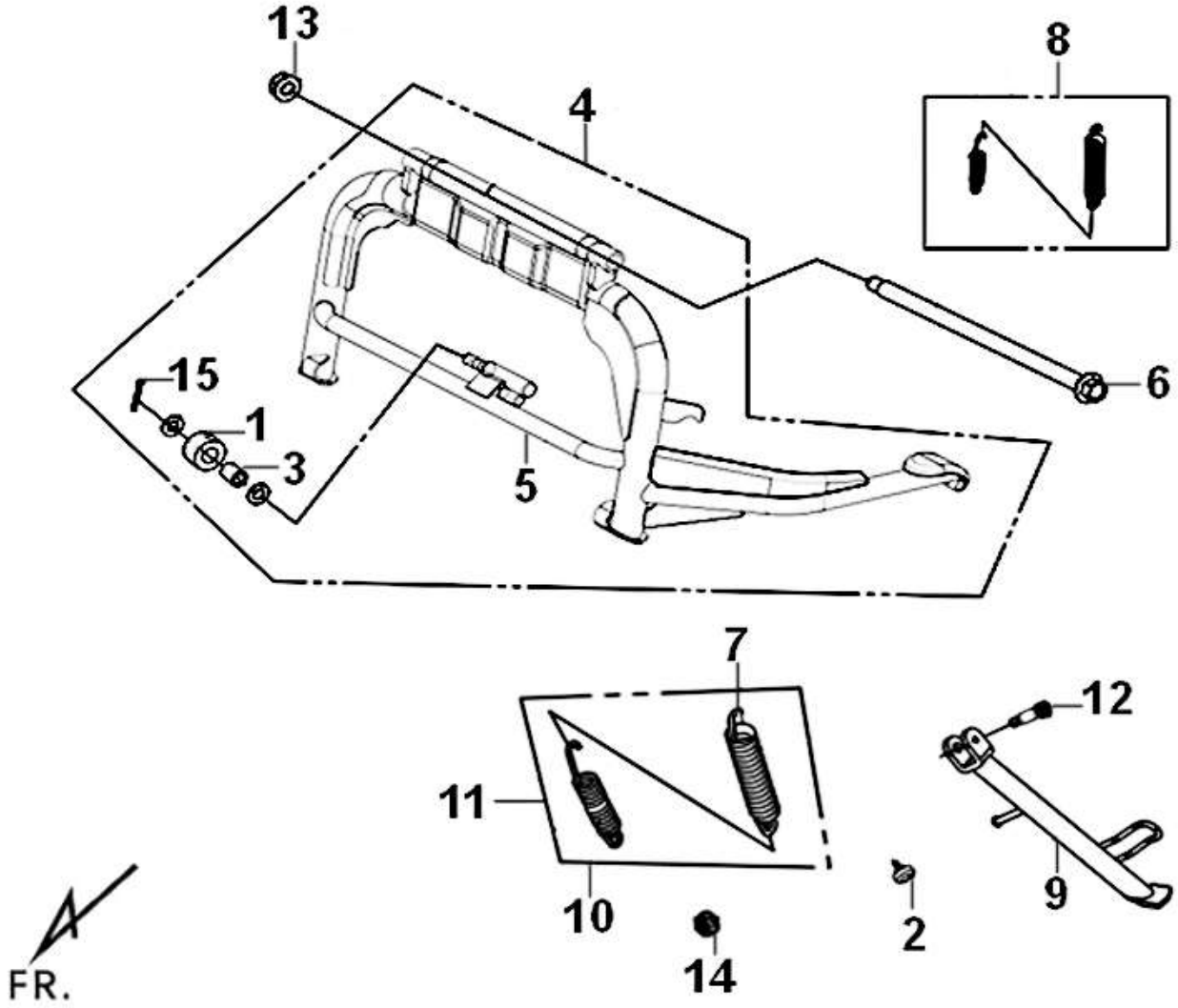

F12		TEA25T1CN-TRC(ZJ1/ ADXTG)		
ORTA SEHPA - YAN SEHPA				
NO	STOK KODU	ACIKLAMA	ADET	
01	50505-H3A-900	TAKOZ SEHPA TAKOZU ORTA	1	
02	50505-NHA-000	TAKOZ SEHPA TAKOZU ORTA	1	
03	50506-J01-000	BURCU TAKOZ PLS LAS SEHPA TAKOZU ORTA	1	
04	5050A-J04-900	SEHPAORTA ANA AYAKLIK	1	
05	50500-J04-900	SEHPAORTA ANA AYAKLIK	1	
06	50512-H6B-000	CIVATA MIL SEHPAORTA DURDURUCU UZUN MILI ADET_(PKT5)	1	
07	50522-HUB-900	YAYI SEHPAYAN YAYI ADET_(PKT5)	1	

08	5052A-L3A-020	YAYI SEHPAORTA YAYI_(5052A-L3A-010)_ADET_(PKT5)	1	
09	50530-ZM1-000	SEHPAYAN AYAKLIK	1	
10	50532-HMA-000	YAYI SEHPAYAN YAYI_(5053A-HMA-000)	1	
11	5053A-HMA-000	YAYI SEHPAYAN YAYI_(50530-Z6A-000)_SOL(L_)_ADET_(PKT5)	1	
12	90106-J01-000	CIVATA FREN JANT DISK CIVATASI	1	
13	90304-M9Q-000-TW	SOMUN 10MM MOTOR ASKISI SOMUNU	1	
14	94030-08070	CIVATA M8* SASE GOVDESI CIVATASI ADET_(PKT5)	1	
15	94201-25200	PIMI MOTORASKI 2 5x20 PIMI_(94201-25201)_ADET_(PKT5)	1	

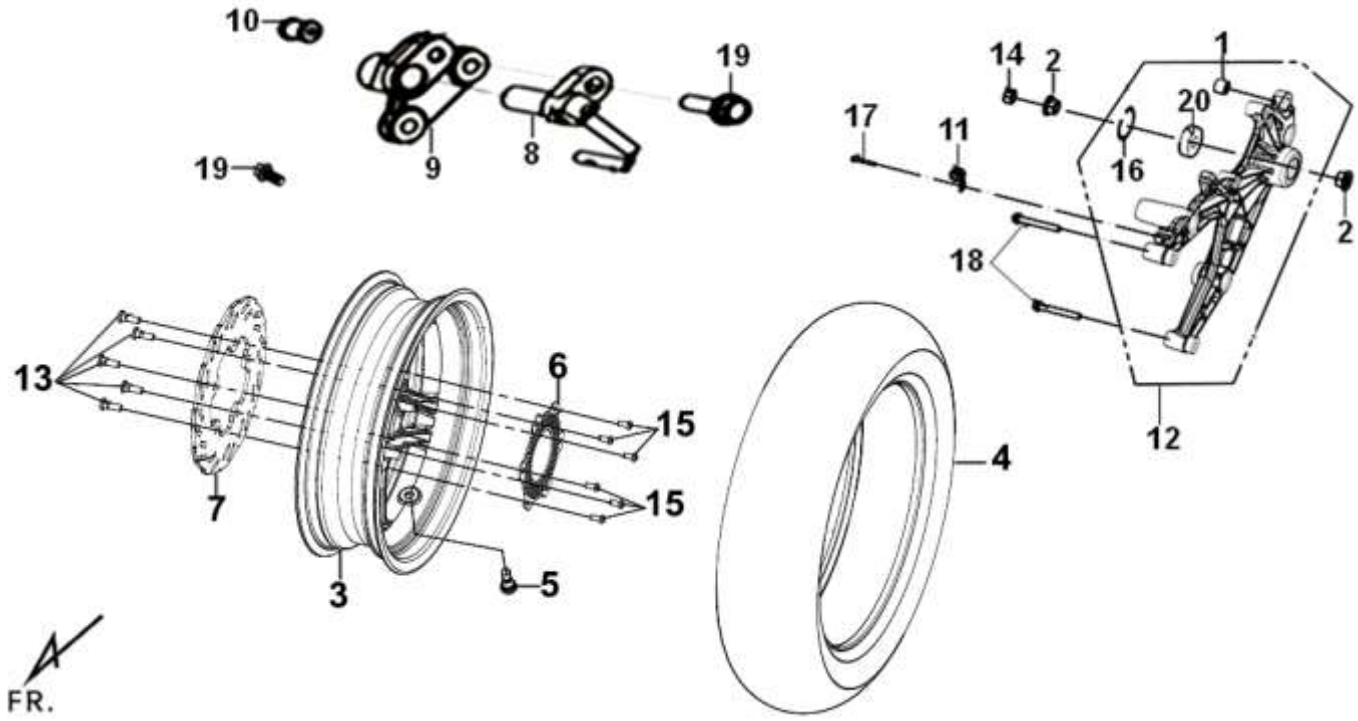

F13		TEA25T1CN-TRC(ZJ1/ ADXTG)		
ARKA TEKER				
NO	STOK KODU	ACIKLAMA	ADET	
01	11203-M9Q-300	BURCU KRANK KUTUSU YASTIK TAKOZU BURCU.ARKA SOL L*	1	
02	42311-H9A-000	BURCU JANT TEKER BAGLANTI BURCU ARKA	2	
03	42601-J01-000-K	JANT ARKA CIPLAK BOS ARKA GUMUS(42601-J01-000)	1	
04	42710-ZM1-000	DIS LASTIK ARKA	1	
05	42753-Z2D-000	AS.DIS JANT SUBABI ARKA/ON	1	
06	43120-ZM1-000	FREN ABS TAKIP DETECTIVE DISKI	1	
07	43121-L3A-900-K	FREN DISKI ARKA SIYAH(BK-001C)(43121-L3A-900)	1	
08	44870-L4C-000-CN1	KM_SAATI KM_SENSOR_(44870-L4C-000)	1	
09	44871-L4C-000	BRAKETI FREN MUSURU BRAKETI ARKA	1	
10	44910-L4C-000	BURCU FREN KAUCUK LASTIK BURCU ADET_(PKT5)	1	
11	45156-LAS-000	KELEPCE FREN HORTUMU KELEPCESI ON	1	
12	5210A-ZM1-000-K	JANT TEKER BAGLAMA DEMIRI ARKA	1	

13	90105-ZHA-000	CIVATA M8*26 FREN JANT DISK CIVATASI ON	5	
14	90305-M9Q-900-TW	SOMUN 16MM KILITLI	1	
15	93500-L2F-000	CIVATA M6*14 JANT ARKA DOKUM CIVATASI_(90004-REA-000)_ADET_(PKT5)	6	
16	94524-47000	SEGMAN JANT SEGMAN IN47MM ARKA	1	
17	95801-06050-07	CIVATA M6*50 MASA(CATAL)_ARKA CIVATASI ADET_(PKT5)	1	
18	95801-10075-07	CIVATA M10*75 MASA(CATAL)_ARKA CIVATASI ADET_(PKT5)	2	
19	96001-06016-07	CIVATA M6*25 ESTELASYON.KABLO DEMETI .CIVATASI	2	
20	96150-63033-10	RULMAN 6303 6303U_(91051-H9A-000)_ARKA	1	

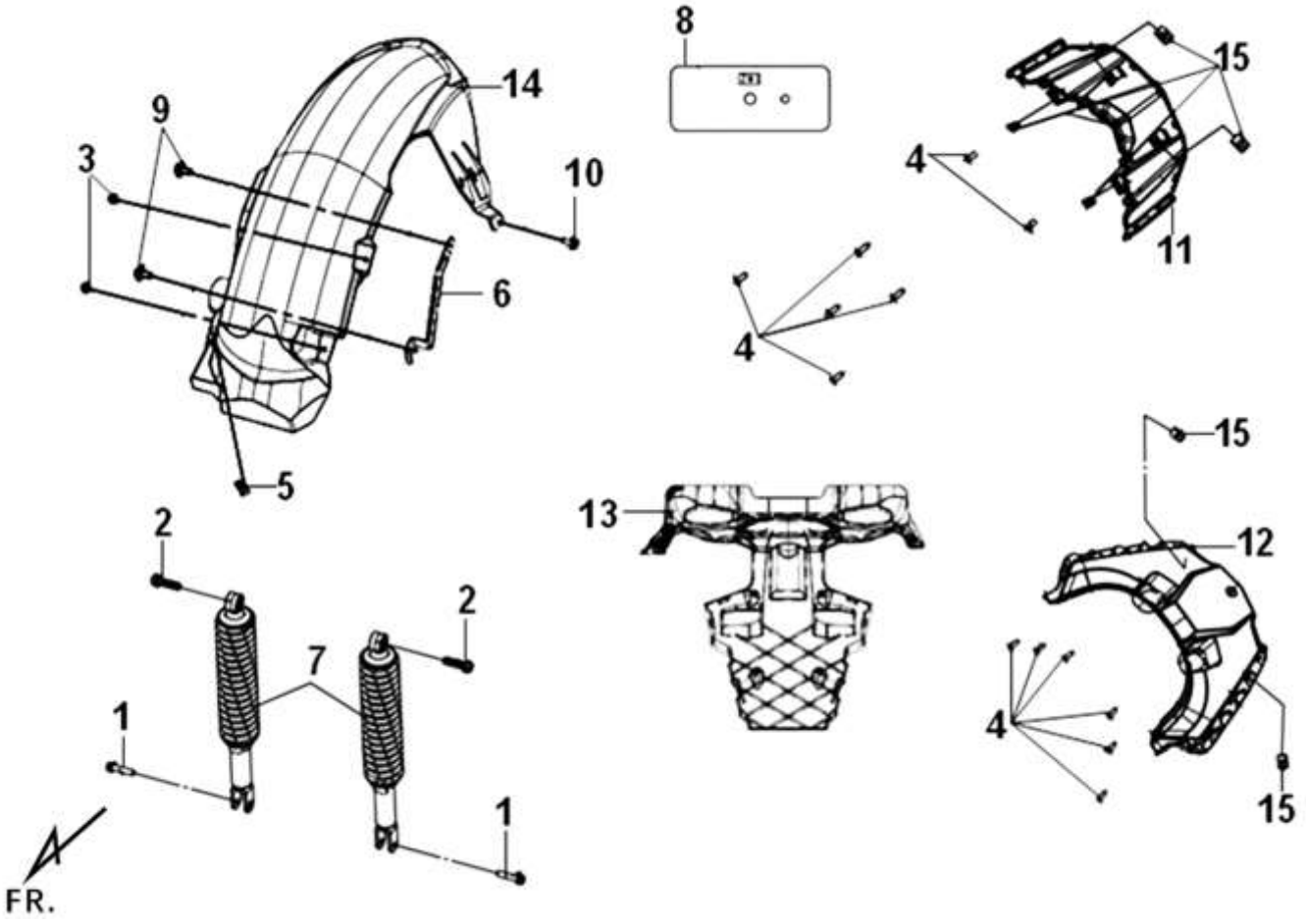

F14		TEA25T1CN-TRC(ZJ1/ ADXTG)		
ARKA CAMURLUK				
NO	STOK KODU	ACIKLAMA	ADET	
01	95801-08035-07	CIVATA M8*35 JANT ARKA CIVATASI.(95801-08035-04)	2	
02	95801-10040-07	CIVATA M10*40 JANT ARKA DOKUM CIVATASI_(95005-RA1-000-J1)_ADET_(PKT5)	2	
03	93894-05016-07	CIVATA M5*16 CAMURLUK ARKA CIVATASI ADET_(PKT5)	2	
04	93903-34370	CIVATA M4*12 IC KUTUSU CIVATASI	13	
05	90305-M9Q-000	SOMUN 6MM GIDON KUMANDA KABLO SOMUNU ADET_(PKT5)	1	
06	52107-J01-000	BRAKETI CAMURLUK BRAKETI ARKA	1	

07	52400-ZM1-000-K	AMORTISOR ARKA	2	
08	53105-ZM1-000	GIDON ELCIK TOPUZU WEIGHT	1	
09	90110-HJC-000	CIVATA M6*12 ADET_(PKT5)	2	
10	90111-J01-000	CIVATA M6* CAMURLUK ARKA CIVATASI	1	
11	80102-ZM1-000	CAMURLUK ARKA KUYRUK	1	
12	83750-ZM1-000	GRNJ_ARKA(RR_) CENTER COVER	1	
13	80105-ZM1-000	BRAKETI CAMURLUK ARKA IC TOZLUK ARKA	1	
14	81100-J01-000	CAMURLUK ARKA TEKER USTU ARKA	1	
15	90302-SA4-900	SOMUN 4MM SAC BAGLANTI SAC SOMUNU.90302SA4010	6	

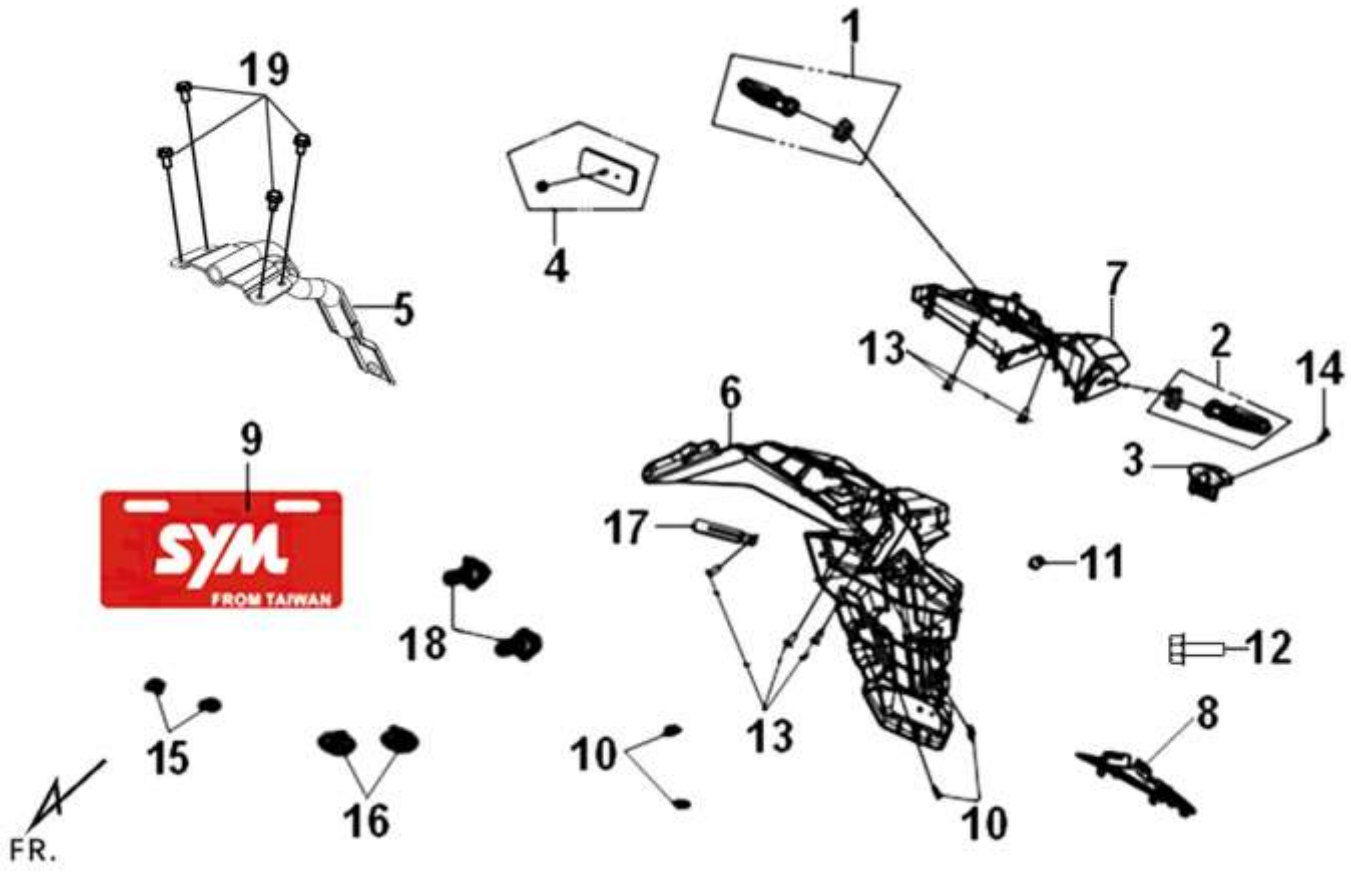

F15		TEA25T1CN-TRC(ZJ1/ ADXTG)		
ARKA SINYAL - ARKA KUYRUK				
NO	STOK KODU	ACIKLAMA	ADET	
01	33600-ZM1-000	AYDINLATMA SINYAL ARKA SAG(R_)	1	
02	33650-ZM1-000	AYDINLATMA SINYAL ARKA SOL(L_)_F14 02_MD_ADX300	1	
03	33740-Z6A-000	AYDINLATMA.PLAKA LAMBASI ADET._JETX125 ORT_ADX125_JET1420RT_ST2ORT_JYRD3L_XPRO_AD	1	
03_1	34908-M70-000	AYDINLATMA.PLAKA LAMBASI ADET._JETX125 E5&E5+Plus_XPRO_ORB50EM_JYRE2_HD2E2_ORB125_FDL2_	1	
04	33741-N7B-E10	AYDINLATMA.REFLEKTOR ARKA ADET._JETX125 ORT_ADX125_JET1420RT_ST2ORT_JYRD3L_NHX1_NHT	1	

05	50110-J01-000	BRAKETI CAMURLUK BAGLANTI BRAKETI ARKA ADET_JYRD3E5.JYRD3E5L.ADX300	1	
06	80100-ZM1-000	CAMURLUK ARKA KUYRUK_F14 06_MD_ADX300	1	
07	80101-ZM1-000	GRNJ YALITIM PLAKASI_F14 07_MD_ADX300	1	
08	80103-ZM1-000-SB	CAMURLUK ARKA TEKER USTU ARKA(S-880 S)_F14 08_MD_ADX300	1	
09	88200-BBC-000	LOGO STICKER CAMURLUK ARKA REMBLEM ARKA ADET _L_JYRD3E5.ADX125.JYRD3E5L.NHX125.NHT200.ADX300	1	
10	90302-SA4-900	SOMUN 4MM SAC BAGLANTI SAC SOMUNU.90302SA4010 .ADET_JETX125 ORT_FIDL4125_ADX125_JET1420RT_ST2IE	4	
11	90899-422-610	TAPA AYAK BASMA PLASTIGI TAPASI ADETNHX_JETX125 ORT_FIDL4125_ADX125_DRG_ST2IE5_JYRD3L_N	1	
12	93404-06012-07	CIVATA M6*12 RADYATOR CIVATASI ADET_(PKT5)_L_O_JYRD3E5.ADX125.DRAGON.JMXZ.25T.JYRD3E5 L.MAXTL508T	1	
13	93903-34370	CIVATA M4*12 IC KUTUSU CIVATASI ADET._JETX125 E5&E5+Plus_ADX125_ADX3	5	
14	93903-34470	CIVATA M4*16 CAMURLUK ARKA CIVATASI ADET._JETX125 E5&E5+Plus_ADX125_ADX3	1	
15	94050-06040	SOMUN 6MM GOVDE KAPAGI SOMUNU ADETNH_JETX125Abs_FIDL4125_ADX125_JET1420RT_ST2IE5_JYR D3L	2	
16	94101-06080	ORINGPUL 6MM SASE DUZ OZEL PULU ADET_(PKT5)_ADX125.ADX300	2	
17	94591-27000	KELEPCE CLIP 2*70 KELEPCESI ADET_(PKT5)_FIDL4125.MAXTL508T.MIO50.ADX300	1	
18	95701-06014-04	CIVATA M6*14 SASE GOVDESI OZEL CIVATASI ADET_(PKT5)_ADX125.ADX300	2	
19	95801-06012-07	CIVATA M6*12 SELE KOLTUK .CIVATASI ADET._JETX125 E5&E5+Plus_ADX125_DRG_JYMXZ+_JYRD3L_MAX508T_	4	

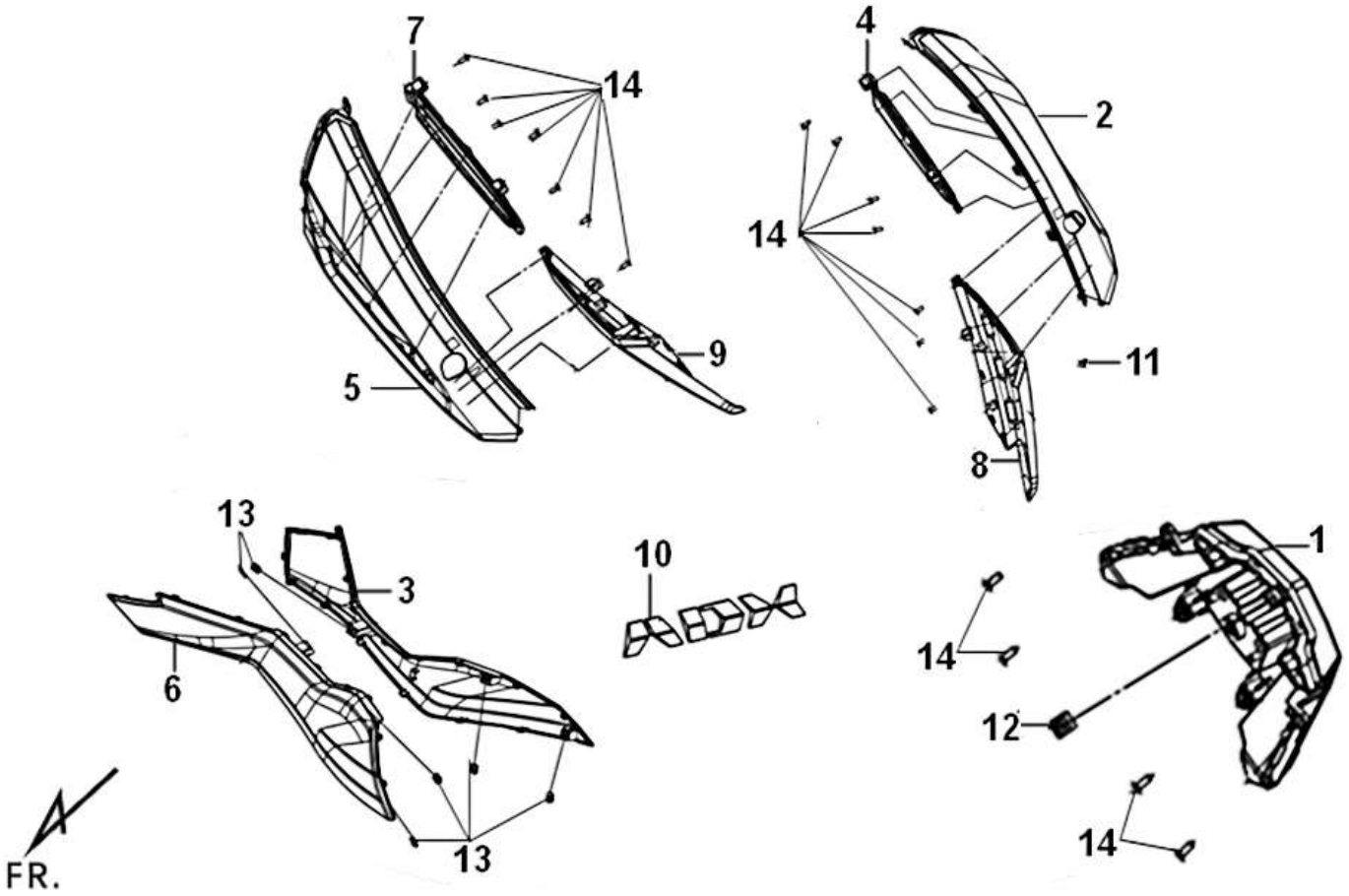

F16		TEA25T1CN-TRC(ZJ1/ ADXTG)		
ARKA STOP - SELE ALTI				
NO	STOK KODU	ACIKLAMA	ADET	
01	33700-ZM1-000	AYDINLATMA STOP ARKA_F15 01_MD_ADX300	1	
02	83500-ZM1-000-AQ	GRNJ SELE ALTI ARKA SAG(R_GY-7547UL)_F15 02_MD_ADX300	1	
02	83500-ZM1-000-AR	GRNJ SELE ALTI ARKA SAG(R_GY-008C)_F15 02_MD_ADX300	1	
02	83500-ZM1-000-AT	GRNJ SELE ALTI ARKA SAG(R_BK-2593U)_F15 02_MD_ADX300	1	
02	83500-ZM1-000-KC	GRNJ SELE ALTI ARKA SAG(R_BK-007U)_F15 02_MD_ADX300	1	
02	83500-ZM1-000-WF	GRNJ SELE ALTI ARKA SAG(R_WH-006U)_F15 02_MD_ADX300	1	
03	83510-ZM1-000-AE	GRNJ ON DEKR KAPAGI ON SAG(R_GY-7450U)_F15 03_MD_ADX300	1	
03	83510-ZM1-000-AE	GRNJ ON DEKR KAPAGI ON SAG(R_GY-7450U)_F15 03_MD_ADX300	1	
03	83510-ZM1-000-AE	GRNJ ON DEKR KAPAGI ON SAG(R_GY-7450U)_F15 03_MD_ADX300	1	
03	83510-ZM1-000-AE	GRNJ ON DEKR KAPAGI ON SAG(R_GY-7450U)_F15 03_MD_ADX300	1	
03	83510-ZM1-000-AT	GRNJ ON DEKR KAPAGI ON SAG(R_BK-2593U)_F15 03_MD_ADX300	1	
04	83550-ZM1-000	GRNJ MARSBIYEL USTU DEKR CITA ARKA SAG(R_)_F15 04_MD_ADX300	1	
05	83600-ZM1-000-AQ	GRNJ SELE ALTI ARKA SOL(L_GY-7547UL)_F15 05_MD_ADX300	1	
05	83600-ZM1-000-AR	GRNJ SELE ALTI ARKA SOL(L_GY-008C)_F15 05_MD_ADX300	1	

05	83600-ZM1-000-AT	GRNJ SELE ALTI ARKA SOL(L_BK-2593U))_F15 05_MD_ADX300	1	
05	83600-ZM1-000-KC	GRNJ SELE ALTI ARKA SOL(L_BK-007U)_F15 05_MD_ADX300	1	
05	83600-ZM1-000-WF	GRNJ SELE ALTI ARKA SOL(L_WH-006U)_F15 05_MD_ADX300	1	
06	83610-ZM1-000-AE	GRNJ ON KISIM YAN FR_KAPAGI ON SOL(L_GY-7450U)_F15 06_MD_ADX300	1	
06	83610-ZM1-000-AE	GRNJ ON KISIM YAN FR_KAPAGI ON SOL(L_GY-7450U)_F15 06_MD_ADX300	1	
06	83610-ZM1-000-AE	GRNJ ON KISIM YAN FR_KAPAGI ON SOL(L_GY-7450U)_F15 06_MD_ADX300	1	
06	83610-ZM1-000-AE	GRNJ ON KISIM YAN FR_KAPAGI ON SOL(L_GY-7450U)_F15 06_MD_ADX300	1	
06	83610-ZM1-000-AT	GRNJ ON KISIM YAN FR_KAPAGI ON SOL(L_BK-2593U)_F15 06_MD_ADX300	1	
07	83650-ZM1-000	GRNJ SELE ALTI CITASI SOL(L_)_F15 07_MD_ADX300	1	
08	83850-ZM1-000	GRNJ MARSBIYEL ALTI SAG(R_A)_F15 08_MD_ADX300	1	
09	83950-ZM1-000	GRNJ MARSBIYEL ALTI SOL(L_B)_F15 09_MD_ADX300	1	
10	87128-ZHE-000	STICKER	2	
11	90115-REA-000-TW	SOMUN 6MM KAPAGI SOMUNU ADET_JETX125Abs&E5_JETX125Abs&E5_FIDL4125_ADX125_ST2IE5_JYRD3L_	1	
12	90116-LM4-000-TW	CIVATA SPECIAL_F15 12_MD_ADX300	1	
13	90302-SA4-900	SOMUN 4MM SAC BAGLANTI SAC SOMUNU.90302SA4010 .ADET_JETX125 ORT_FIDL4125_ADX125_JET1420RT_ST2IE	6	
14	93903-34370	CIVATA M4*12 IC KUTUSU CIVATASI ADET._JETX125 E5&E5+Plus_ADX125_ADX3	18	

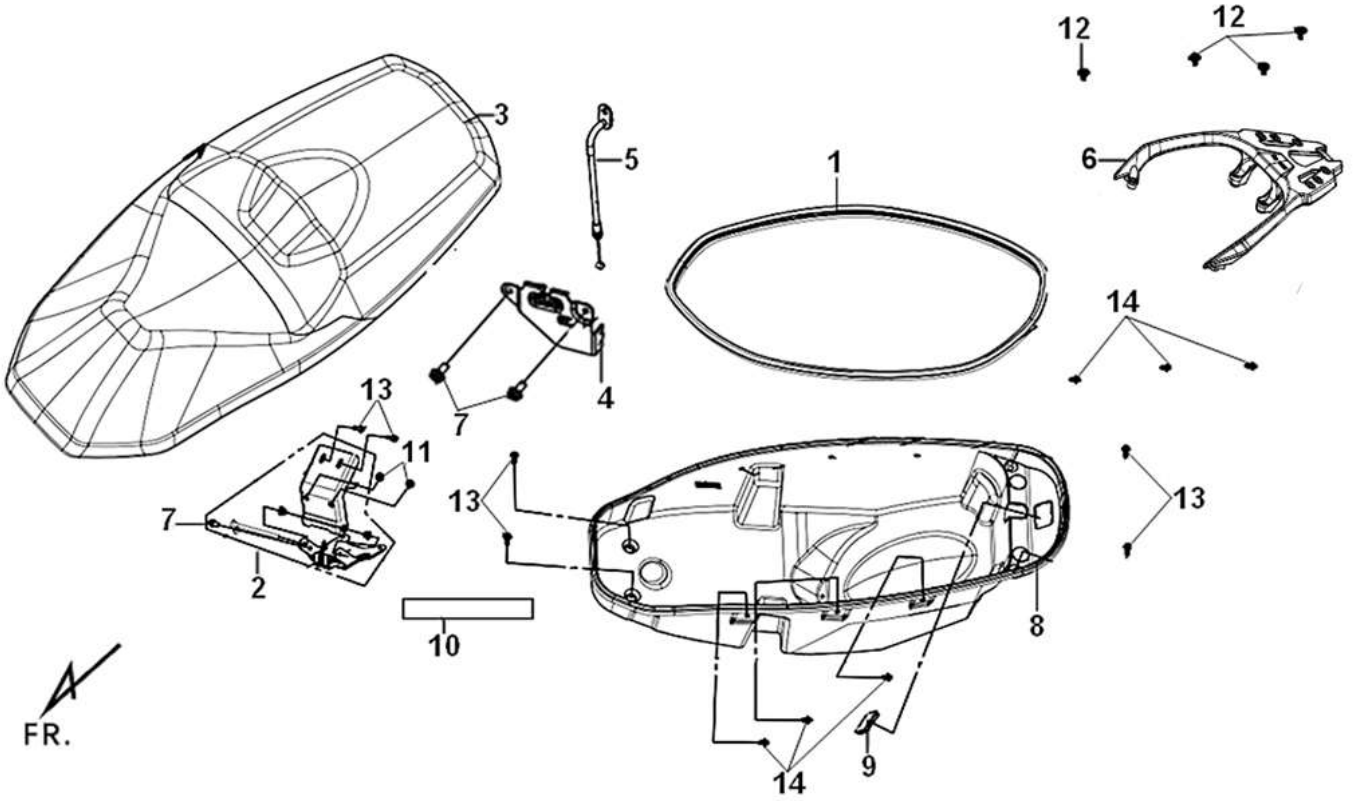

F17		TEA25T1CN-TRC(ZJ1/ ADXTG)		
SELE - PORT BAGAJ				
NO	STOK KODU	ACIKLAMA	ADET	
01	77115-ZM1-000	KECE SELE KAUCUK LASTIK_F16 01_MD_ADX300	1	
02	7711A-ZM1-000	SELE KOLTUK MENTESESI_F16 02_MD_ADX300	1	
03	77200-ZM1-000-T1	SELE KOLTUK_F16 03_MD_ADX300	1	
04	77230-XTA-000	SELE KOLTUK KILIT MEKANIZMASI ADET.	1	
05	77240-J01-000	KMT SELE ACMA KAPAMA KILIT TELI ADET_JYRD3E5.JYRD3E5L.ADX300	1	
06	81200-ZJ1-000-AE	PORTBAGAJ	1	
07	95801-06012-07	CIVATA M6*12 SELE KOLTUK .CIVATASI ADET._JETX125 E5&E5+Plus_ADX125_DRG_JYMXZ+_JYRD3L_MAX508T_	3	
08	81250-ZM1-000	GRNJ SELE ALTI BAGAJ KASK YUVA_F16 08_MD_ADX300	1	
09	81251-LH1-000-KK	GRNJ KASK YUVASI HAVUZ KAPAK ARKA	1	
10	81251-J01-000	BAGAJ KUTUSU SUNGERI ADET_JYRD3E5.ADX300	1	
11	81300-L1P-000-TW	PORTBAGAJ ARKA YOLCU TUT PORT ARKA_F16 11_MD_ADX300	2	
12	90105-H7A-010	CIVATA M8 ADET_(PKT5)_JYMZ25.JYMX25.HD2E2.CRM25.HDE20KO.ADX300	4	
13	90111-J01-000	CIVATA M6* CAMURLUK ARKA CIVATASI ADET_JYRD3E5.JYRD3E5L.ADX300	6	
14	90115-REA-000-TW	SOMUN 6MM KAPAGI SOMUNU ADET_JETX125Abs&E5_JETX125Abs&E5_FIDL4125_ADX125_ST2I E5_JYRD3L_	6	
15	94050-06070	SOMUN 6MM CAMURLUK ON SOMUNU ADETG.5_JETX125 E5&E5+Plus_FIDL4125G_ADX125_DRG_JYMXZ+_JYMXZ_M	2	

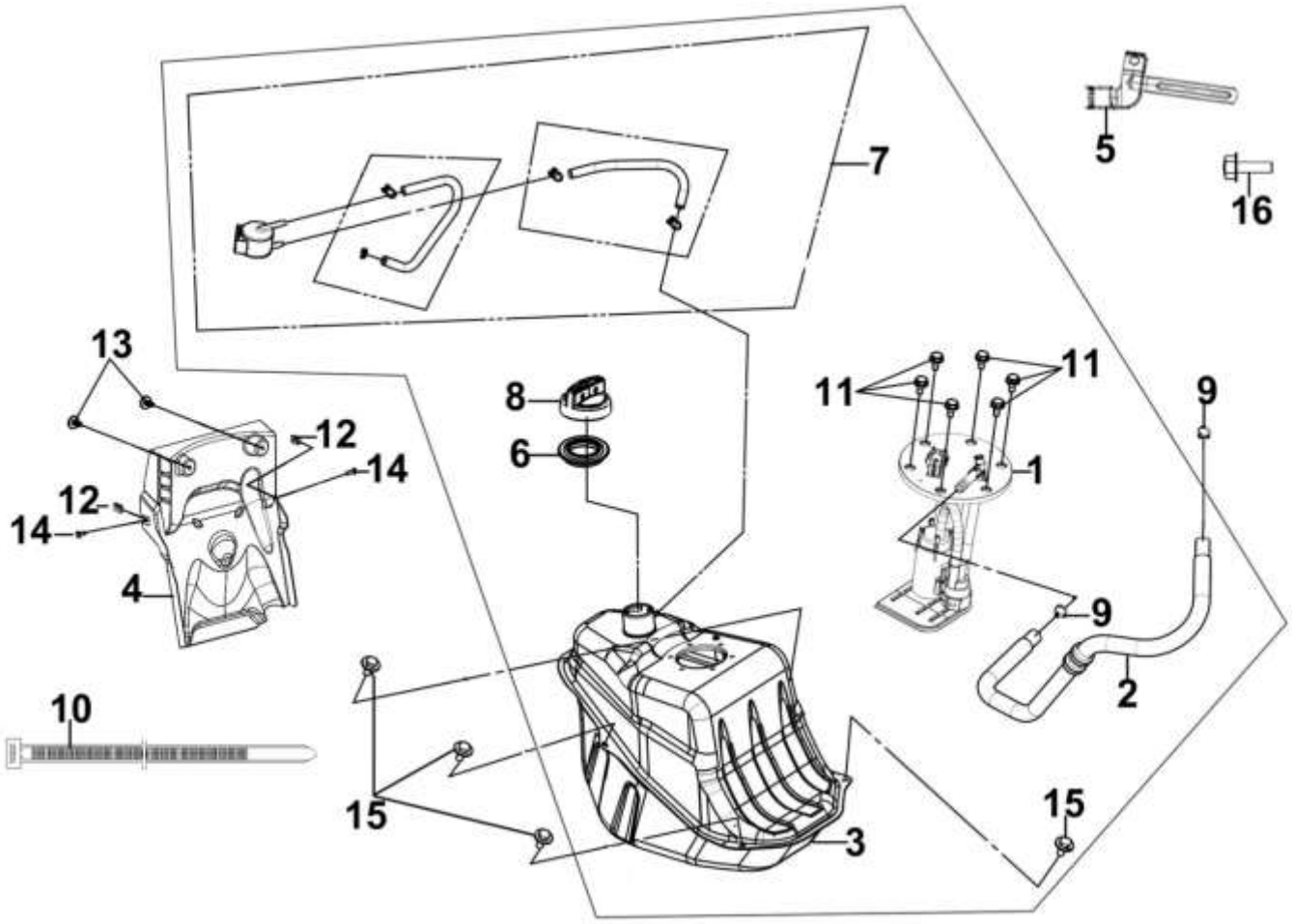

F18		TEA25T1CN-TRC(ZJ1/ ADXTG)		
YAKIT DEPOSU - BENZIN POMPASI				
NO	STOK KODU	ACIKLAMA	ADET	
01	16700-ZM1-000	YAKIT BENZIN POMPASI_F17 01_MD_ADX300	1	
01_1	16711-HJA-000	AS.FILTRE YAKIT BENZIN FILTRESI ADET.8,3MM_JETX125 E5_FIDL4125_	1	
02	16730-ZM1-000	HORTUM YAKIT BENZIN HORTUMU_F17 02_MD_ADX300	1	
03	17500-ZM1-000	YAKIT BENZIN DEPOSU_F17 03_MD_ADX300	1	
04	17508-J01-000	TAKOZ YAKIT BENZIN DEPO TAKOZU ADET_JYRD3E5.JYRD3E5L.ADX300	1	
05	17509-J01-000	KELEPCE GIDON BORU TUPU KELEPCESI ADET_(PKT5)_JETX125T.ADX300	1	
06	17512-L9M-000	CONTASI YAKIT DEPO KAPAGI CONTASI ADET_ADX125.JMXZ.25T.JYMZ25.ADX300	1	
07	17580-ZM1-000	YAKIT BENZIN KESME VALFI_F17 07_MD_ADX300	1	
08	1762A-LM2-000-TW	YAKIT DEPO KAPAGI ADET_ADX125.ADX300	1	
09	19505-F81-000-TW	KELEPCE RADYATOR BAGLANTI HORTUMU KELEPCESI ADET_JYRD3E5.JYRD3E5L.ADX300	2	
10	32161-APA-000	KELEPCE GIDON ESTALASYON300MM KELEPCESI ADET _JETX125 E5&E5+Plus_ADX125_ST2IE5_JYRD3L_NHX1_MIO5	1	
11	90106-LEA-000	CIVATA YAKIT DEPOSU/YAKIT POMPASI CIVATASI ADET_(PKT5)_L_508_JYRD3E5.JMXZ.25T.JYMZ25.JYRD3E5L.MA	6	

12	**90308-X04-000**	**SOMUN 5MM RADYATOR SOMUNU ADET_(PKT5)_DRAGON.MAMBA.JMXZ.25T.MAXTL508T.XPRO125.ADX300**	**2**	
13	**93404-06012-07**	**CIVATA M6*12 RADYATOR CIVATASI ADET_(PKT5)_L_O_JYRD3E5.ADX125.DRAGON.JMXZ.25T.JYRD3E5L.MAXTL508T**	**2**	
14	**93903-45370**	**CIVATA 5*16_F17 14_MD_ADX300**	**2**	
15	**95801-06012-07**	**CIVATA M6*12 SELE KOLTUK .CIVATASI ADET._JETX125 E5&E5+Plus_ADX125_DRG_JYMXZ+_JYRD3L_MAX508T_**	**4**	
16	**96001-06012-07**	**CIVATA M6*12 GIDON KUMANDA KABLO CIVATASI ADET_(PKT5)_L_JYRD3E5.ADX125.JMXZ.25T.JYRD3E5L.MAXTL50**	**1**	

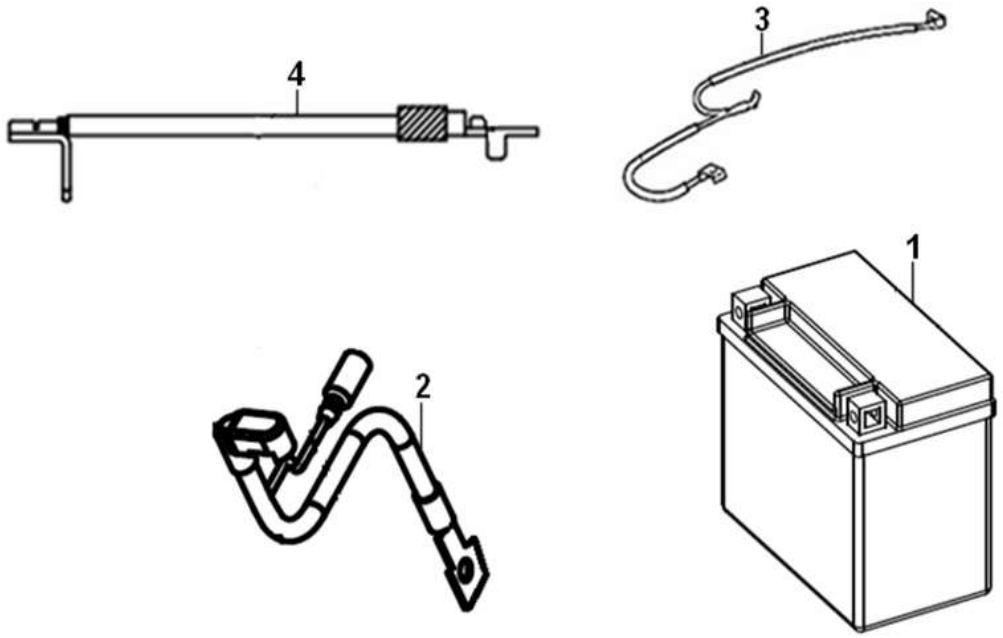

F19	**TEA25T1CN-TRC(ZJ1/ ADXTG)**		
AKU			
NO	**STOK KODU**	**ACIKLAMA**	**ADET**
01	**31500-XTF-000**	**AKU_F18 01_MD_ADX300**	**1**
02	**32411-L3A-000**	**AKU KABLOSU BATTERY CABLE ArtI Uc ADET_JYRD3E5.JYRD3E5L.CRMS3.ADX300**	**1**
03	**32412-XTA-000**	**AKU TOPRAKLAMA KABLOSU EARTH CABLE EksI Kablosu ADET_JYRD3E5.JYRD3E5L.ADX300**	**1**
04	**32412-F6S-000**	**AKU TOPRAKLAMA KABLOSU EARTH CABLE EksI Kablosu ADET_JYRD3E5.JYRD3E5L.ADX300**	**1**

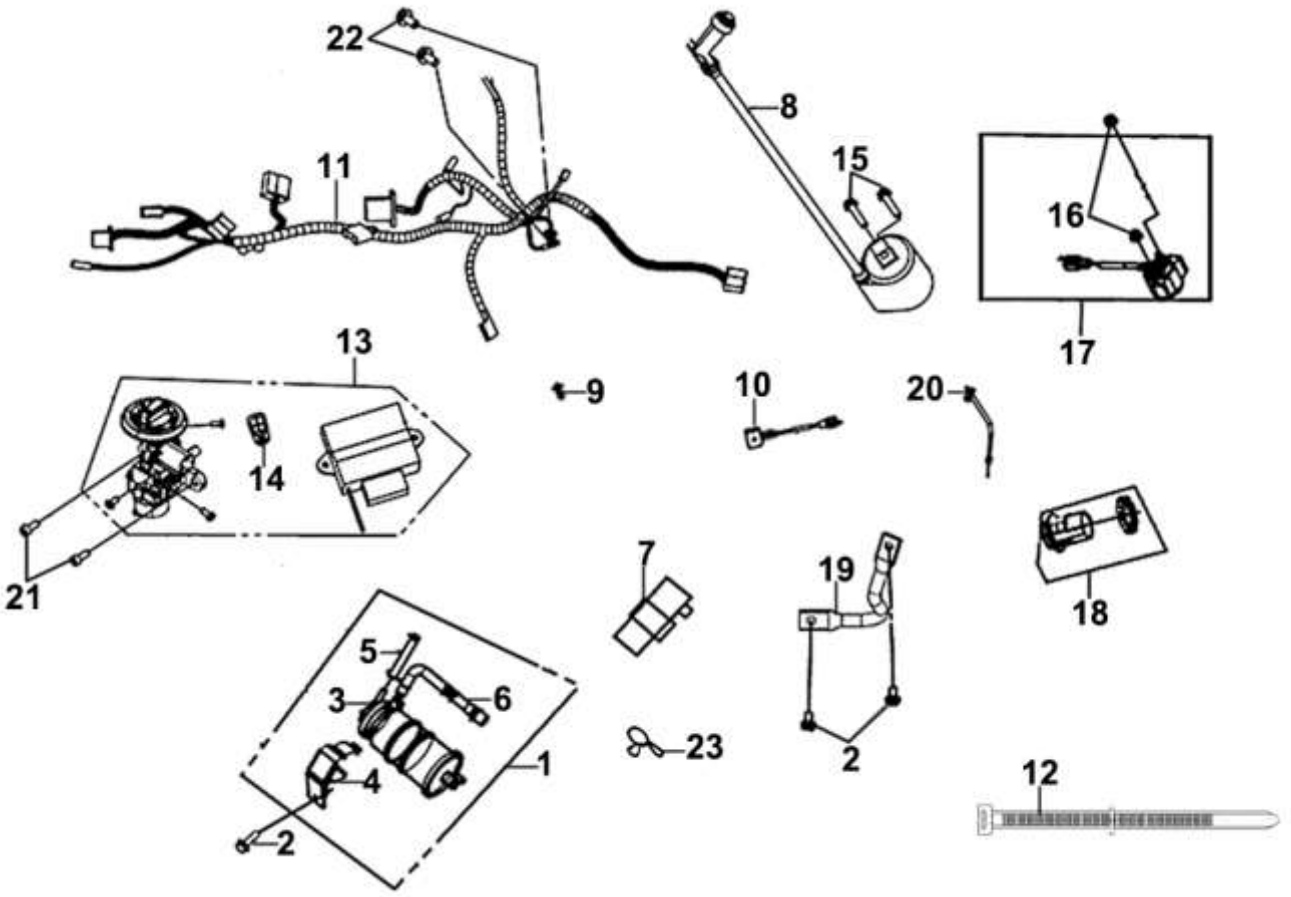

F20		TEA25T1CN-TRC(ZJ1/ ADXTG)		
ESTELASYON - KONTAK SET				
NO	STOK KODU	ACIKLAMA	ADET	
01	1730A-ZM1-000	HAVA EMISYON HAVALANDIRMA TUPU SET_F19 01_MD_ADX300	1	
02	95801-06012-07	CIVATA M6*12 SELE KOLTUK .CIVATASI ADET._JETX125 E5&E5+Plus_ADX125_DRG_JYMXZ+_JYRD3L_MAX508T_	3	
03	17550-ZM1-000	YAKIT EMISYON HAVALANDIRMA TUPU KUTUSU_F19 03_MD_ADX300	1	
04	17551-J01-000	KELEPCE YAKIT EMISYON HAVALANDIRMA TUPU KELEPCESI ADET_L_ADX125.JYRD3E5L.ADX300	1	
05	1768A-J01-000	ENJK FUEL INJECTOR GAZ KELEBEK GOVDESI ASSY ADET_JOYRIDE_JOYRIDE.ADX300	1	
06	1768B-J01-000	HORTUM YAG BORUSU_F19 06_MD_ADX300	1	
07	3043A-REA-000-A6	AKU KONTROL ELEKTRONIK UNITESI ACIK ADET_JYRD3E5.JYRD3E5L.ADX300	1	
08	3051A-XTA-000	ATESLEME BOBINI_F19 08_MD_ADX300	1	
09	90112-06020-07	CIVATA 6*20_F19 09_MD_ADX300	1	
10	31700-M46-000	CONTASI SILICON RECT COMP ON ADET_JYRE2AO.ADX300	1	
11	32100-ZM2-000	GRNJ YAN TARAF KAPAGI SAG(R_) XB1 F07 05 XPRO125E5_Orbit III 50_	1	
12	32161-APA-000	KELEPCE GIDON ESTALASYON300MM KELEPCESI ADET _JETX125 E5&E5+Plus_ADX125_ST2IE5_JYRD3L_NHX1_MIO5	11	
13	35010-J01-000	KONTAK SET	1	

13_1	35120-XTD-000	KONTAK KAPAGI ADET_MD_JOYMAXZE5+	1	
13_2	35870-X93-000	AS.MUSUR DOGRU AKIM SELONIDI DC SOLENOID SOL L*.ADET_JETX125 ORT_ADX125_JYRD3L_	1	
13_3	35300-ZGA-000	AS.NIYET HIRSIZ SARTERI.ADET._JOYMAXZE5+	1	
14	35111-ZGA-000	KONTAK SADECE ANAHTAR ADET_JMZE5+	2	
15	90112-H5B-000	CIVATA M4* SASE GOVDESI CIVATASI ADETH_JETX125 ORT_FIDL4125_ADX125_JET1420RT_ST2IE5_NHX1_N	2	
16	35859-M9Q-000	SOMUN SISTEM PARCALARI SOMUNU ADET._JETX125 ORT_FIDL4125_JET1420RT_ST2IE5_JYMXZ_JYRD3L	2	
17	3585A-49A-000-CN2	FREN BALATASI DISK BALATA ON A SET 2PCS/1SET _SET (A) XPRO125_ORB50EM_JYRE2AB_HD2KR2_ORB125_FDL2	1	
18	38650-XTF-000	USB USB GIRIS SISTEMI ADET F05_JET14EVO.ADX300	1	
19	50325-ZM1-000	AKU BORUSU_F19 19_MD_ADX300	1	
20	77245-ZM1-000	KMT YAKIT KAPAGI KILIT KABLOSU TELI_F19 20_MD_ADX300	1	
21	90085-XN1-000	CIVATA ESTELASYON.KABLO DEMETI .CIVATASI ADET_JETX125 ORT_ADX125_ST2IE5_JYRD3L_ADX3	2	
22	90110-FYA-000	CIVATA M6*14 ESTELASYON_(KABLO DEMETI)_CIVATASI_(90004-REA-000)_ADET_(PKT5)_JYRD3E5.DRAGON.JMXZ.	3	
23	95002-80000	KELEPCE C12 FILTRE KELEPCESI ADET_(PKT5)_L_JYRD3E5.DRAGON.JMXZ.25T.JYRD3E5L.MAXTL508T.ADX300	1	

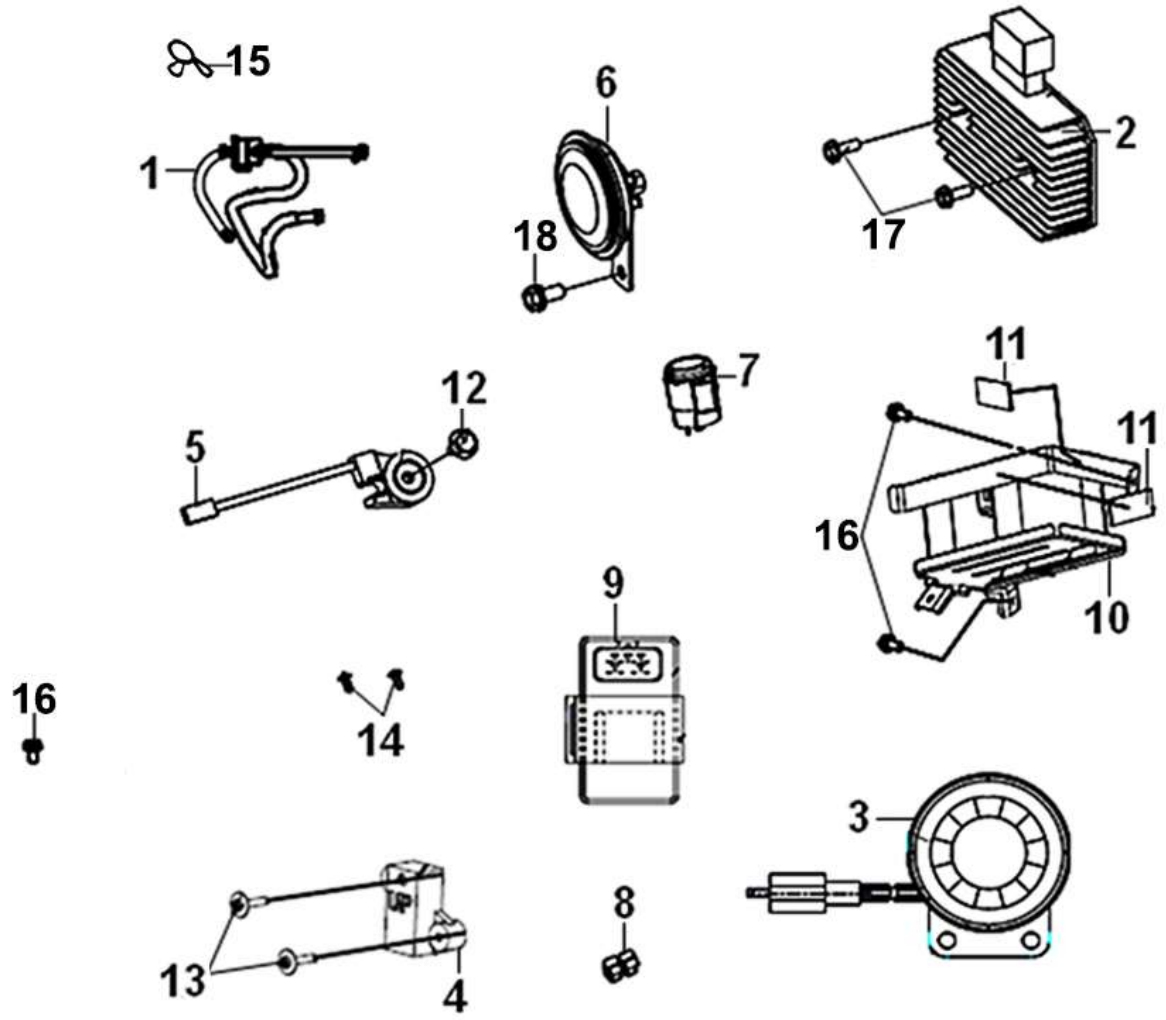

F21		TEA25T1CN-TRC(ZJ1/ ADXTG)		
KONJEKTOR - KORNA				
NO	STOK KODU	ACIKLAMA	ADET	
01	1738A-J01-000	HAVA EMISYON HAVALANDIRMA TUPU ADET_GTSE25O.ADX300	1	
02	31600-ZM1-000	KONJEKTOR_REGULATOR_F20 02_MD_ADX300	1	
03	35500-X93-000	AS.KORNA ALARM IÇIN HORN OrljInal ADET_JETX125 ORT_ADX125_JET142EVO_JYMXZ_JYRD3L_ADX3	1	
04	36100-A5L-100-A1-TW	MUSUR SASE DENGE SENSORU ADET_JYRD3E5.JYRD3E5L.ADX300	1	
05	36500-HMA-900-E6	MUSUR SEHPAYAN MUSURU_(36500-HMA-900) ADET_SO_JYRD3E5.JYRD3E5L.MIO100.JYRE2SO.HD2E2.HDE2.ADX3	1	
06	38100-XTA-000	KORNA HORN OrljInal ADET_JYRD3E5.JYRD3E5L.ADX300_	1	
07	38300-Z2D-010-M2	AYDINLATMA FLASOR SINYAL	1	
08	3850A-HLA-100-A1-VN	AS.FLASOR ROLE ADET._JETX125 E5&E5+Plus_FIDL4125_ADX125_JET142EVO_JET1420RT_ST2ORT_JYRD3L_NHT_NH	3	
09	3970A-L5B-000	FREN ACIL UYARI SISTEMI_F20 09_MD_ADX300	1	

10	50316-ZM1-000	AKU KUTUSU_F20 10_MD_ADX300	1	
11	83619-J01-000	TAKOZ AKU DISTANCE KAUCUK LASTIK ADET_JYRD3E5.JYRD3E5L.ADX300	3	
12	93404-06016-07	CIVATA M6*16 CAMURLUK ARKA CIVATASI ADET_JETX125 E5&E5+Plus_FIDL4125_ADX125_DRG_JYMXZ+_JYMXZ_JY	1	
13	93894-04022-08	CIVATA M4*22 SASE GOVDESI CIVATASI ADET_(PKT5)_L_J_JYRD3E5.DRAGON.JMXZ.25T.JYMZ25.JYRD3E 5L.HD2E2	2	
14	93903-34370	CIVATA M4*12 IC KUTUSU CIVATASI ADET._JETX125 E5&E5+Plus_ADX125_ADX3	2	
15	95002-80000	KELEPCE C12 FILTRE KELEPCESI ADET_(PKT5)_L_JYRD3E5.DRAGON.JMXZ.25T.JYRD3E5L.MAXTL 508T.ADX300	2	
16	95801-06012-07	CIVATA M6*12 SELE KOLTUK .CIVATASI ADET._JETX125 E5&E5+Plus_ADX125_DRG_JYMXZ+_JYRD3L_MAX508T_	3	
17	95801-06016-07	CIVATA M6*16 ON GOHUS KAPAGI CIVATASI ADET_JETX125 E5&E5+Plus_FIDL4125G_ADX125_DRG_JYMXZ+_JYRD3	2	
18	95801-08012-07	CIVATA M8*12 SISTEM PARCALARI CIVATASI ADET._JETX125 E5&E5+Plus_ADX125_JYRD3L_MAX508T_ADX3	1	

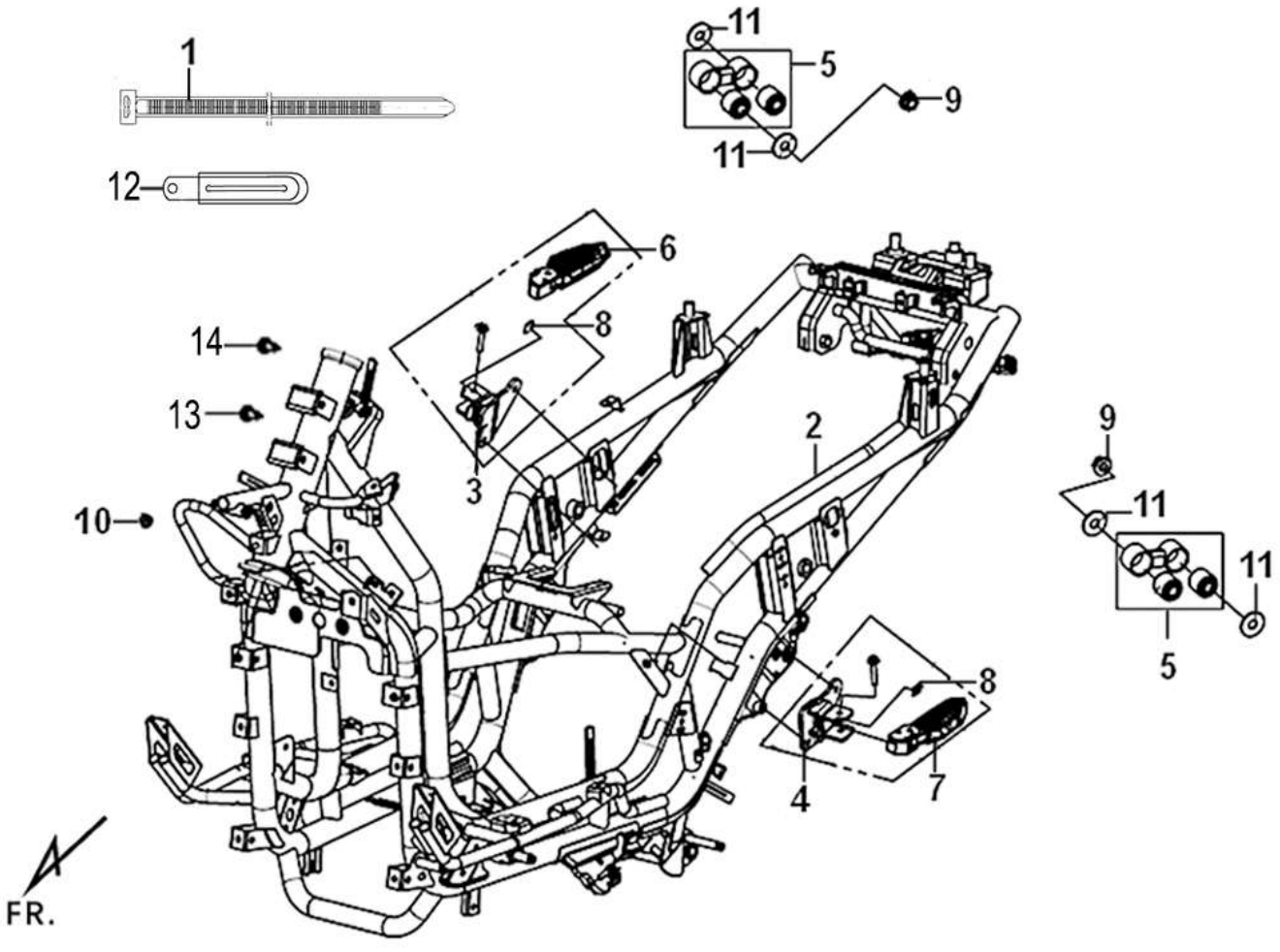

F22	TEA25T1CN-TRC(ZJ1/ ADXTG)
SASE	

NO	STOK KODU	ACIKLAMA	ADET	
01	32161-APA-000	KELEPCE GIDON ESTALASYON300MM KELEPCESI ADET _JETX125 E5&E5+Plus_ADX125_ST2IE5_JYRD3L_NHX1_MIO5	8	
02	50100-ZJ1-000	SASE	1	
03	50180-J01-000	BRAKETI BASAMAK YOLCU ACILIR BAGLAMA BRAKETI SAG(R_) ADET_JYRD3E5.JYRD3E5L.ADX300	1	
04	50181-J01-000	BRAKETI BASAMAK YOLCU ACILIR BAGLAMA BRAKETI SOL ADET_JYRD3E5.JYRD3E5L.ADX300	1	
05	50380-J01-000	MAFSAL ASKI GERME CUBUGUMAFSAL ASKI SALINCAK ISTINAT KOLU ADET_JYRD3E5.JYRD3E5L.ADX300	2	
06	5071A-XTF-000-SB	BASAMAK SAG(R_)_MD_JMZE5+	1	
07	5071B-XTF-000-SB	BASAMAK SOL(L_)_MD_JMZE5+ (5071B-XTF-000)	1	
08	83619-L3A-000	GRNJ SELE ALTI DESTEK PLASTIGI ARKA ADET _LJ_JYRD3E5LJ.JYMX25.ADX300	2	
09	90306-M9Q-000-TW	SOMUN 12MM SASE GOVDESI SOMUNU ADET_JYRD3E5.JYRD3E5L.ADX300	2	
10	94050-08070	SOMUN 16MM SASE GOVDESI SOMUNU ADET_(PKT5)_ADX125.ATV3.ADX300	2	
11	94103-12700	ORINGPUL 8MM GIDON FURJ DUZ PULU ADET_(PKT5)_L_JYRD3E5.JYRD3E5L.MAXTL508T.ADX300	4	
12	94591-11000	KELEPCE	8	
13	95801-06035-07	CIVATA M6*35 JANT ARKA DOKUM CIVATASI ADET_(PKT5)_L_JYRD3E5.JMXZ.25T.JYMZ25.JYRD3E5L.CRM25.ADX30	2	
14	95801-08018-07	CIVATA M8*18 SASE GOVDESI CIVATASI_(96700-LZC-000)_ADET_(PKT5)_JMXZ.25T.JYMZ25.JYMX25.CRM25.ADX3	4	

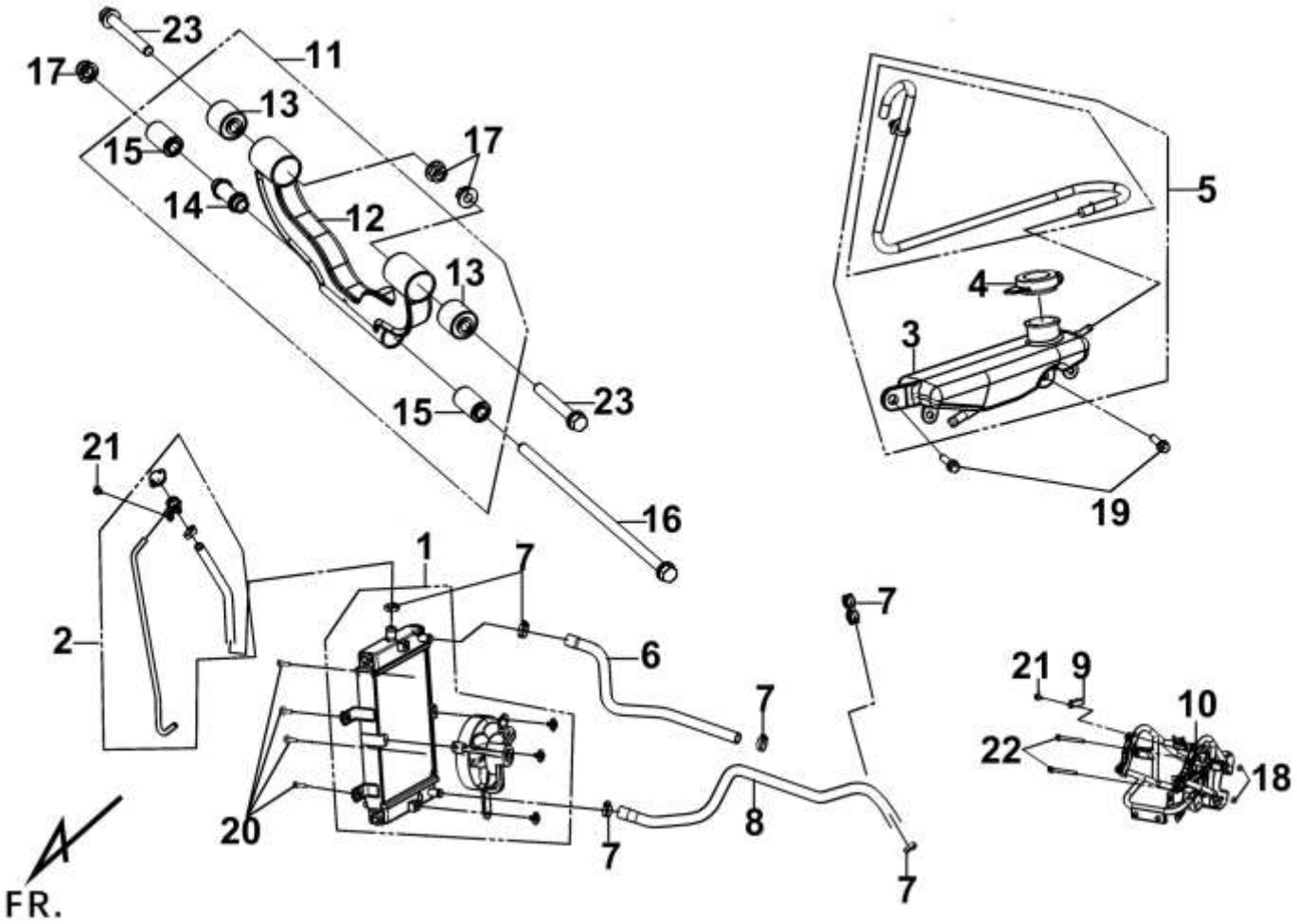

F23		TEA25T1CN-TRC(ZJ1/ ADXTG)		
RADYATOR				
NO	STOK KODU	ACIKLAMA	ADET	
01	19000-XTA-000	RADYATOR KOMPLE ADET.	1	
02	1903A-ZM1-000	RADYATOR SU DAGITICI_F22 02_MD_ADX300	1	
03	19101-LH1-000	RADYATOR YEDEK SU DEPOSU ADET_JYRD3E5.JYRD3E5L.ADX300	1	
04	19104-M9Q-000	RADYATOR YEDEK SU DEPO KAPAGI ADET._JETX125 ORT_ADX125_DRG_JYMXZ+_JYMXZ_JYRD3L_MAX508T_MAMBA_ DRG	1	
05	1910A-J01-000	RADYATOR YEDEK SU DEPOSU ADET_JYRD3E5.JYRD3E5L.ADX300	1	
06	19501-ZM1-000	HORTUM RADYATOR TERMOSTAT SU HORTUM_F22 06_MD_ADX300	1	
07	19505-REA-000-TW	KELEPCE RADYATOR BAGLANTI HORTUMU KELEPCESI ADET_JYRD3E5.JYRD3E5L.ADX300	6	
08	19505-ZM1-000	HORTUM RADYATOR DEVIRDAIM GIRIS HORTUM BORU_F22 08_MD_ADX300	1	
09	45156-B9A-000	KELEPCE FREN HORTUMU KELEPCESI ON ADET _LJ_JYRD3E5LJ.WOLF25.ADX300	1	
10	50315-ZM1-000	BRAKETI ON PANEL BAGLANTI BRAKETI_F22 10_MD_ADX300	1	
11	50350-J01-000	BRAKETI MAFSAL MOTOR ASKISI BAGLANTI DEMIRI_F22 11_MD_ADX300	1	

12	**50351-J01-000**	**BRAKETI MAFSAL MOTOR ASKISI BAGLANTI DEMIRI ADET_JYRD3E5.JYRD3E5L.ADX300**	**1**	
13	**50353-J01-000-TW**	**BURCU MAFSAL MOTOR ASKISI KILIT BURCU ADET_JYRD3E5.JYRD3E5L.ADX300**	**2**	
14	**50354-LEA-000**	**BURCU MAFSAL MOTOR ASKISI DIS BILEZIK YUZUK ADET_JYRD3E5.JYRD3E5L.ADX300**	**1**	
15	**50357-J01-000-TW**	**BURCU MAFSAL ASKI BURCU ADET_JYRD3E5.JYRD3E5L.ADX300**	**2**	
16	**90105-J01-000**	**CIVATA M12*290 MOTOR ASKISI CIVATASI ADET_JYRD3E5.JYRD3E5L.ADX300**	**1**	
17	**90306-M9Q-000-TW**	**SOMUN 12MM SASE GOVDESI SOMUNU ADET_JYRD3E5.JYRD3E5L.ADX300**	**3**	
18	**90309-M9Q-000**	**SOMUN 6MM EGSOZ SOMUNU.90309428731KD .ADET_JETX125 E5&E5+Plus_ST2IE5_MAX508T_MIO1_FDL3ORT_SRST1**	**2**	
19	**93404-06012-07**	**CIVATA M6*12 RADYATOR CIVATASI ADET_(PKT5)_L_O_JYRD3E5.ADX125.DRAGON.JMXZ.25T.JYRD3E5L .MAXTL508T**	**2**	
20	**93404-06020-07**	**CIVATA M6*20 RADYATOR CIVATASI ADET_(PKT5)_L_JYRD3E5.JYRD3E5L.NHX125.MIO100.ADX300**	**4**	
21	**95801-06012-07**	**CIVATA M6*12 SELE KOLTUK .CIVATASI ADET._JETX125 E5&E5+Plus_ADX125_DRG_JYMXZ+_JYRD3L_MAX508T_**	**2**	
22	**95801-08065-07**	**CIVATA M8*60_(95801-08060-07)_ADET_(PKT5)_ATV6_ATV6.VSEM.ADX300**	**2**	
23	**95801-12090-07**	**CIVATA M12*90 MOTOR ASKISI CIVATASI ADET_JYRD3E5.JYRD3E5L.ADX300**	**2**	

MODEL:TEA25T1CN-TRC PARTS NO. INDEX 2025.12

PARTS NO.	**NO.**		**PARTS NO.**	**NO.**		**PARTS NO.**	**NO.**	
06414-XTA-000	E16		12342-X01-000	E08		15421-B9D-000	E08	
11000			12342-X01-000	E16		15426-M9Q-000	E08	
11100-L3A-000	E06		12361-M9Q-000	E08		1565A-J01-000	E08	
11107-HMA-000	E06		12363-XTA-000	E05		15711-HML-000	E06	
11120-LEA-000	E06		12391-HMA-000	E05		15713-J02-000	E08	
11120-LEA-000	E14		13000			15772-500-013	E04	
11133-A1A-300	E14		13000-LH3-000	E15		16000		
11191-L3A-000	E06		13010-HMA-000-TW	E15		16201-HMC-000	E16	
11200-J01-000	E14		13101-HMA-000-TW	E15		16211-XTA-000	E16	
11203-M9Q-300	E14		13111-HMA-000	E15		16219-J01-000	E16	

11203-M9Q-300	F13		14000			1640A-ZJ1-600	E16	
11205-XTA-000	E14		14100-J01-000	E05		16700-ZM1-000	F18	
11211-L3A-000	E04		14105-RFA-000-TW	E05		16711-HJA-000	F18	
11221-J01-000	E13		14105-X01-000	E05		16730-ZM1-000	F18	
11330-J01-000	E08		14108-M36-000	E05		17000		
11341-J01-010	E10		14151-RFA-000	E06		1711A-J01-000	E16	
11344-HMA-000	E10		14401-RFA-000	E05		17120-XTA-000	E16	
11346-HMA-000	E10		1443A-J01-000	E02		17200-J01-000	E17	
11351-J01-010	E10		1444A-J01-000	E02		17208-HMA-000	E17	
11352-XTA-000	E10		14451-XTA-000	E02		17211-J01-000	E17	
11354-H3A-000	E10		14457-HMA-000	E05		17221-LEA-000	E10	
11356-H3A-000	E10		14510-RFA-000	E05		17230-J01-000	E17	
11371-HMA-000-TW	E10		14523-Z8G-000	E07		17231-J01-000	E17	
11383-LH3-000	E10		14525-J01-000	E07		17253-J01-000	E17	
11394-J01-000	E08		1452A-J0D-000	E07		1730A-ZM1-000	F20	
11395-J01-010	E10		14531-KJ9-000	E05		17369-M9Q-000	E04	
12000			14610-BCE-000	E05		17370-M9Q-000	E04	
12100-HMA-000-TW	E07		14711-HMA-000	E02		17371-M9Q-000	E04	
12191-RFA-000-TW	E07		14721-RFS-000	E02		17380-H6A-000	E04	
12209-H6B-900	E02		14751-XTA-000	E02		17385-H6A-000	E04	
1220C-XTA-000	E02		14761-HMA-000	E02		1738A-J01-000	F21	
12251-BAA-000-TW	E07		14771-M8Q-000	E02		17500-ZM1-000	F18	
12301-XTA-000	E05		14777-M8Q-000	E02		17508-J01-000	F18	
12306-ANL-000	E16		14781-A01-A00-A	E02		17509-J01-000	F18	
12306-MA2-000	E01		15000			17512-L9M-000	F18	

12306-NFC-000	E07		15100-HMA-000-TW	E06		17550-ZM1-000	F20	
12310-L3A-000	E07		15126-XTF-000	E06		17551-J01-000	F20	
12312-NKA-000	E07		15133-HMA-000	E06		17562-J01-000	E04	
12313-NKA-000	E07		15141-HMA-000	E06		17580-ZM1-000	F18	
12342-X01-000	E02		15200-HML-000-TW	E06		17590-MMA-000-TW	E04	

MODEL:TEA25T1CN-TRC PARTS NO. INDEX 2025.12								
PARTS NO.	**NO.**		**PARTS NO.**	**NO.**		**PARTS NO.**	**NO.**	
17591-HMC-000	E04		19505-F81-000-TW	F18		28101-RB1-000	E06	
17592-HMC-000	E04		19505-KS6-700	E03		28102-RB1-000	E06	
17593-J01-000	E04		19505-REA-000-TW	E03		28110-XTA-000	E09	
17594-J01-000	E04		19505-REA-000-TW	F23		2812A-XTA-000	E09	
1762A-LM2-000-TW	F18		19505-ZM1-000	F23		30000		
1768A-J01-000	F20		19509-HWA-000	E03		3043A-REA-000-A6	F20	
1768B-J01-000	F20		1951A-HMA-010	E03		3051A-XTA-000	F20	
17910-ZM1-000	F03		21000			31000		
18000			21301-J01-000	E13		31110-J01-000	E09	
18000-ZJ1-000-K	E18		21395-J01-000	E13		31120-LH1-000	E09	
18291-H9A-000	E18		22000			31200-HMA-000	E06	
18292-A6A-000	E18		22000-J31-000	E11		31500-XTF-000	F19	
18293-F7S-000	E18		22101-L2C-000	E12		31600-ZM1-000	F21	
18295-LA2-000	E18		22102-XTA-000	E11		31700-M46-000	F20	
18295-T3C-A00	E18		22105-J31-000	E11		32000		
18295-T3C-A00	F09		22110-XTA-000	E11		32100-ZM2-000	F20	

18300-ZJ1-000	E18		22121-XTA-001-A	E11		32161-APA-000	F18	
18317-ZM1-000	E18		22131-LM7-000	E11		32161-APA-000	F20	
18320-F3E-000	F09		22132-XTA-000-A-XS	E11		32161-APA-000	F22	
18321-L1A-000	E18		22300-L2C-000	E12		32162-H6T-000	E16	
18328-ZM1-000	E18		22350-L2C-000	E12		32411-L3A-000	F19	
18600-LDA-000-TW	E07		22361-L2C-000	E12		32412-F6S-000	F19	
18647-J01-000	E05		22401-L2C-000	E12		32412-XTA-000	F19	
18654-N14-000	E05		22530-L2C-000-A-XS	E12		33000		
19000			22804-L2C-000	E12		33100-ZM1-000	F05	
19000-XTA-000	F23		23000			33400-ZM1-000	F05	
1903A-ZM1-000	F23		2301A-L2C-000	E12		33450-ZM1-000	F05	
19101-LH1-000	F23		23100-LHA-000	E11		33600-ZM1-000	F15	
19104-M9Q-000	F23		23200-L2C-000	E12		33650-ZM1-000	F15	
1910A-J01-000	F23		23220-L2C-000	E12		33700-ZM1-000	F16	
19215-HLA-000	E08		23225-L2C-000	E12		33740-Z6A-000	F15	
19217-TL1-300-TW	E08		23226-L2C-000	E12		33741-N7B-E10	F15	
19220-LEA-000	E01		23233-L2C-000	E12		33742-X8A-000	F08	
19229-H9A-000	E01		23237-L2C-000	E12		34000		
19231-LH1-000-TW	E08		23238-L2C-000	E12		34908-M70-000	F15	
19300-MA1-000-CN1	E02		23411-LM7-000	E13		35000		
19315-L3A-010	E02		23420-J01-000	E13		35010-J01-000	F20	
19501-ZM1-000	F23		23431-J01-000	E13		35120-XTD-000	F20	
19502-LH1-000	E03		23432-J01-000	E13		35150-ZM2-000	F03	
19502-ZM1-000	E03		28000			35200-ZM1-000	F03	

MODEL:TEA25T1CN-TRC PARTS NO. INDEX 2025.12

PARTS NO.	NO.		PARTS NO.	NO.		PARTS NO.	NO.	
35300-ZGA-000	F20		44000			50350-J01-000	F23	
35340-L6C-000	F04		44301-L3A-000-TW	F08		50351-J01-000	F23	
35350-L6C-000	F04		44311-L3A-000	F08		50353-J01-000-TW	F23	
35500-X93-000	F21		44600-J01-000-K	F10		50354-LEA-000	F23	
35600-ZGA-000	F07		44620-L3A-000	F10		50357-J01-000-TW	F23	
35859-M9Q-000	F20		44710-ZM1-000	F10		50380-J01-000	F22	
3585A-49A-000-CN2	F20		44870-L4C-000-CN1	F10		50500-J04-900	F12	
35870-X93-000	F20		44870-L4C-000-CN1	F13		50505-H3A-900	F12	
36000			44871-L4C-000	F13		50505-NHA-000	F12	
36100-A5L-100-A1-TW	F21		44910-L4C-000	F10		50506-J01-000	F12	
36500-HMA-900-E6	F21		44910-L4C-000	F13		5050A-J04-900	F12	
37000			45000			50512-H6B-000	F12	
37200-ZM2-100	F01		4500A-ZM1-000-K	F04		50522-HUB-900	F12	
37880-HLK-900-M2	E03		45100-L9F-000	F04		5052A-L3A-020	F12	
37890-XVA-000	E18		45105-L9F-000	F04		50530-ZM1-000	F12	
38000			4510A-ZM1-000	F04		50532-HMA-000	F12	
38100-XTA-000	F21		45120-ZM1-000	F10		5053A-HMA-000	F12	
38300-Z2D-010-M2	F21		45121-L9F-000-SB	F10		50611-ZM1-000	F11	
3850A-HLA-100-A1-VN	F21		45126-ZM1-000	F04		5071A-XTF-000-SB	F22	
38650-XTF-000	F20		45127-ZM1-000	F04		5071B-XTF-000-SB	F22	
38731-ZM1-000	F04		45156-B9A-000	F23		51000		
3873B-ZM1-000	F04		45156-J01-000	F09		51400-ZM1-900-K	F08	
39000			45156-LAS-000	F13		51423-J04-000	F08	

3970A-L5B-000	F21		45157-J01-000	F08		51425-J04-900	F08	
42000			45158-J01-000	F08		51500-ZM1-900-K	F08	
42311-H9A-000	F13		45500-ZM1-000	F04		52000		
42601-J01-000-K	F13		4550A-ZM1-000	F04		52107-J01-000	F14	
42710-ZM1-000	F13		45517-TFA-000	F04		5210A-ZM1-000-K	F13	
42753-Z2D-000	F10		50000			52400-ZM1-000-K	F14	
42753-Z2D-000	F13		50100-ZJ1-000	F22		53000		
43000			50110-J01-000	F15		53100-ZM1-000-S1	F03	
43100-L3A-010	F04		50180-J01-000	F22		53104-ZM1-000	F03	
43105-ARB-000-A	F04		50181-J01-000	F22		53105-ZM1-000	F14	
4310A-ZM1-000	F04		50301-HMA-000	F09		53125-M9Q-000	F03	
43120-ZM1-000	F13		50305-L4A-000	F08		53131-ZM1-000-S1	F01	
43121-L3A-900-K	F13		50306-M9Q-000-XS	F09		53132-ZM1-000-S1	F01	
43126-ZM1-000	F04		50308-HMA-000	F09		53133-ZM1-000-S1	F01	
43127-ZM1-000	F04		50315-ZM1-000	F23		53140-XTA-000	F03	
43500-ZM1-000	F04		50316-ZM1-000	F21		53166-XTA-000	F03	
4350A-ZM1-000	F04		50325-ZM1-000	F20		53175-HMA-000-XS	F04	

MODEL:TEA25T1CN-TRC PARTS NO. INDEX 2025.12								
PARTS NO.	**NO.**		**PARTS NO.**	**NO.**		**PARTS NO.**	**NO.**	
53178-HMA-000-XS	F04		64303-ZM1-000-AT	F05		67102-ZHA-000-SV	F02	
53200-ZM1-000	F08		64304-B9A-000	F04		77000		
53205-ZM1-000-S1	F01		64304-X01-000	F05		77115-ZM1-000	F17	
53207-ZM1-000	F01		64304-ZM1-000-AE	F05		7711A-ZM1-000	F17	
53208-ZM1-000	F03		64304-ZM1-000-AE	F05		77200-ZM1-000-T1	F17	

53209-ZM1-000	F03		64304-ZM1-000-AE	F05		77226-M3F-000	F02	
53211-HMA-000	F09		64304-ZM1-000-AE	F05		77230-XTA-000	F17	
53211-ZM1-000-S1	F01		64304-ZM1-000-AT	F05		77240-J01-000	F17	
53212-L4A-000	F09		64305-ZM1-000-K	F05		77245-ZM1-000	F20	
53212-ZM1-000-S1	F01		64306-X01-000	F05		77405-L4A-000-TW	F07	
53213-ZM1-000-S1	F01		64306-ZM1-000-AQ	F05		80000		
53214-L4A-000	F08		64306-ZM1-000-AR	F05		80100-ZM1-000	F15	
53215-HMA-000-M2	F09		64306-ZM1-000-AT	F05		80101-ZM1-000	F15	
53220-HMA-000-TW	F09		64306-ZM1-000-KC	F05		80102-ZM1-000	F14	
53225-L4A-000	F09		64306-ZM1-000-WF	F05		80103-ZM1-000-SB	F15	
53231-ZM1-000	F01		64307-ZM1-000-AQ	F05		80105-ZM1-000	F14	
53232-ZM1-000	F01		64307-ZM1-000-AR	F05		81000		
53272-ALA-000	F02		64307-ZM1-000-AT	F05		81100-J01-000	F14	
61000			64307-ZM1-000-KC	F05		81131-ZM1-000	F06	
61100-ZM1-000-AQ	F09		64307-ZM1-000-WF	F05		81132-ZM1-000-AQ	F07	
61100-ZM1-000-AR	F09		64308-ZM1-000	F05		81132-ZM1-000-AR	F07	
61100-ZM1-000-AT	F09		64309-ZM1-000	F05		81132-ZM1-000-AT	F07	
61100-ZM1-000-KC	F09		64310-ZM1-000	F11		81132-ZM1-000-KC	F07	
61100-ZM1-000-WF	F09		64311-ZM1-000	F07		81132-ZM1-000-WF	F07	
61101-ZM1-000	F09		64312-ZM1-000	F07		81133-ZM1-000	F06	
61102-ZM1-000	F09		64313-ZM1-000	F07		81134-ZM1-000	F06	
61103-ZM1-000	F09		64315-L9M-000	F06		81135-ZM1-000	F06	
61201-B9A-000	F04		64316-L9M-000	F06		81136-ZM1-000	F06	
64000			64317-L9M-000	F06		81137-ZM1-000	F06	
64300-ZM1-000	F07		64318-L3A-000	F06		81138-ZM1-000	F07	

64301-ZM1-000-AQ	F05		64319-ZM1-000	F06		81140-XN1-000-TW	F06	
64301-ZM1-000-AR	F05		64320-L9M-000-TW	F06		81141-ZM1-000	F11	
64301-ZM1-000-AT	F05		64320-ZM1-000	F11		81142-ZM1-000	F11	
64301-ZM1-000-KC	F05		64330-ZM1-000-SB	F11		81143-ZM1-000	F11	
64301-ZM1-000-WF	F05		64340-ZM1-000-SB	F11		81144-ZM1-000	F11	
64302-ZM1-000	F05		64350-ZM1-000	F11		81147-ZM1-000	F07	
64303-ZM1-000-AE	F05		64360-ZM1-000	F11		81200-ZJ1-000-AE	F17	
64303-ZM1-000-AE	F05		67000			81250-ZM1-000	F17	
64303-ZM1-000-AE	F05		67100-ZM1-000-K	F02		81251-J01-000	F17	
64303-ZM1-000-AE	F05		67101-ZHA-000-SV	F02		81251-LH1-000-KK	F17	

MODEL:TEA25T1CN-TRC PARTS NO. INDEX 2025.12								
PARTS NO.	**NO.**		**PARTS NO.**	**NO.**		**PARTS NO.**	**NO.**	
81300-L1P-000-TW	F17		88110-ZJA-000	F03		90116-L4A-000	E18	
83000			88120-ZJA-000	F03		90116-L5B-000	E18	
83500-ZM1-000-AQ	F16		88200-BBC-000	F15		90116-LM4-000-TW	F16	
83500-ZM1-000-AR	F16		90000			90116-ZM1-000	F01	
83500-ZM1-000-AT	F16		90001-B9D-000	E13		90118-HAA-000	F11	
83500-ZM1-000-KC	F16		90001-J01-000	E18		90118-L4G-000	F04	
83500-ZM1-000-WF	F16		90002-ANL-000	E05		90145-M9Q-800	F04	
83502-T3D-K00	F06		90002-J01-000	E18		90157-F3G-000	E09	
83510-ZM1-000-AE	F16		90012-MB1-000	E02		90201-KR8-751-M1	E09	
83510-ZM1-000-AE	F16		90031-HMA-000	E06		90201-KR8-751-M1	E11	
83510-ZM1-000-AE	F16		90032-HMA-000	E14		90201-KR8-751-M1	E12	

83510-ZM1-000-AE	F16		90034-HMA-000	E02		90202-L2C-000	E12	
83510-ZM1-000-AT	F16		90043-HMA-000	E18		90206-HLK-000	E02	
83520-ZM1-000	F11		90084-VBA-000	E08		90302-M9Q-000	F08	
83530-ZM1-000	F11		90085-XN1-000	F20		90302-SA4-900	F01	
83550-ZM1-000	F16		90102-L4A-000	F04		90302-SA4-900	F05	
83600-ZM1-000-AQ	F16		90103-KN8-000	E14		90302-SA4-900	F06	
83600-ZM1-000-AR	F16		90105-H7A-010	F17		90302-SA4-900	F07	
83600-ZM1-000-AT	F16		90105-J01-000	F23		90302-SA4-900	F09	
83600-ZM1-000-KC	F16		90105-ZHA-000	F10		90302-SA4-900	F11	
83600-ZM1-000-WF	F16		90105-ZHA-000	F13		90302-SA4-900	F14	
83610-ZM1-000-AE	F16		90106-J01-000	F12		90302-SA4-900	F15	
83610-ZM1-000-AE	F16		90106-LEA-000	F18		90302-SA4-900	F16	
83610-ZM1-000-AE	F16		90106-TAA-000	F03		90304-M9Q-000-TW	F03	
83610-ZM1-000-AE	F16		90110-FYA-000	F20		90304-M9Q-000-TW	F12	
83610-ZM1-000-AT	F16		90110-H6T-000	F02		90305-M9Q-000	F09	
83619-J01-000	F21		90110-HJC-000	F06		90305-M9Q-000	F14	
83619-L3A-000	F22		90110-HJC-000	F07		90305-M9Q-900-TW	F13	
83620-ZM1-000	F11		90110-HJC-000	F14		90306-M9Q-000-TW	F22	
83630-ZM1-000	F11		90111-J01-000	F14		90306-M9Q-000-TW	F23	
83650-ZM1-000	F16		90111-J01-000	F17		90308-X04-000	F18	
83750-ZM1-000	F14		90111-M9Q-800-XS	F11		90309-M9Q-000	F01	
83850-ZM1-000	F16		90112-06020-07	F20		90309-M9Q-000	F23	
83950-ZM1-000	F16		90114-AWU-000	F03		90401-B9D-000	E13	
87000			90115-J04-000	F09		90401-HMA-000	E13	
87123-ZJ1-000	F05		90115-REA-000-TW	F07		90401-KJ9-000	E09	

87124-ZJ1-000	F05		90115-REA-000-TW	F11		90401-KJ9-000	E11	
87128-ZHE-000	F16		90115-REA-000-TW	F16		90401-KJ9-000	E12	
87160-XTH-000	F09		90115-REA-000-TW	F17		90423-KJ9-000	E08	
88000			90115-ZM1-000	F03		90442-HMA-000	E02	

MODEL:TEA25T1CN-TRC PARTS NO. INDEX 2025.12

PARTS NO.	**NO.**		**PARTS NO.**	**NO.**		**PARTS NO.**	**NO.**	
90474-M9Q-000	E14		93401-05035-08	E09		94050-06070	F04	
90478-700-000	E01		93404-06012-07	F06		94050-06070	F17	
90495-F91-000	E14		93404-06012-07	F09		94050-08070	F22	
90545-M9Q-000	F04		93404-06012-07	F11		94050-10080	E02	
90555-AMA-000	E18		93404-06012-07	F15		94101-06080	F15	
90601-HMA-000	E15		93404-06012-07	F18		94101-06700	E18	
90652-FDD-000	E17		93404-06012-07	F23		94103-12700	F22	
90652-RB1-000	E17		93404-06016-07	F05		94109-12000	E14	
90677-M9Q-000	E17		93404-06016-07	F21		94111-06700	E18	
90682-V02-900	E04		93404-06020-07	F23		94201-16150	F01	
90701-HB6-010	E15		93404-06030-07	E17		94201-25200	F12	
90703-M8Q-000	E13		93500-05008-0H	E07		94301-08140	E01	
90754-LEA-000	F10		93500-L2F-000	F13		94301-08140	E06	
90899-422-610	F15		93891-05016-07	E17		94301-08140	E09	
90912-LEA-000	F10		93891-06028-07	F08		94301-08140	E14	
91000			93894-04022-08	F21		94301-12200	E07	
91001-KJ9-005-M1	E08		93894-05016-07	F14		94510-10000	E06	
91001-XTD-000	E15		93903-34370	F01		94510-20000	E14	
91002-HWA-000	E13		93903-34370	F05		94510-30000	E13	
91009-HMC-000	E13		93903-34370	F06		94520-26000	E08	
91201-HMA-300	E14		93903-34370	F07		94520-28000	E08	
91202-HMA-000-M1	E08		93903-34370	F11		94524-47000	F13	
91203-HMA-000	E13		93903-34370	F14		94540-L2C-000	E12	
91204-HMA-000-M2	E13		93903-34370	F15		94591-11000	F22	
91205-KF0-003	E08		93903-34370	F16		94591-27000	F15	
91211-L2C-000	E12		93903-34370	F21		95000		
91301-HMA-000	E07		93903-34470	F15		95002-80000	E04	
91302-M9T-000	E08		93903-35370	F01		95002-80000	E13	
91303-HMA-000	E10		93903-35370	F05		95002-80000	F20	

91304-VA2-000	E08		93903-44380	F06		95002-80000	F21	
91305-L2C-000	E12		93903-44470	F06		95003-23022-10	E04	
91307-M8Q-000	E08		93903-44470	F07		95701-06014-04	F15	
92000			93903-44470	F08		95701-06028-02	E07	
92101-05016-0H	E09		93903-44470	F11		95701-10012-00	E14	
92101-06016-0H	E05		93903-45370	F18		95801-06012-07	F01	
92101-06025-0H	E06		93903-ZM1-000	F05		95801-06012-07	F06	
92800-12000	E14		94000			95801-06012-07	F08	
92900-06030-0B	E02		94030-08070	F12		95801-06012-07	F15	
93000			94050-06000	E16		95801-06012-07	F17	
93401-05020-0H	E04		94050-06040	F15		95801-06012-07	F18	

MODEL:TEA25T1CN-TRC PARTS NO. INDEX 2025.12

PARTS NO.	**NO.**		**PARTS NO.**	**NO.**		**PARTS NO.**	**NO.**	
95801-06012-07	F20		96001-06040-00	E16				
95801-06012-07	F21		96001-06050-00	E14				
95801-06012-07	F23		96001-06055-00	E06				
95801-06016-07	F21		96001-06070-00	E14				
95801-06020-07	F04		96001-06090-02	E02				
95801-06022-07	F05		96001-06090-02	E07				
95801-06035-07	F22		96100-60000	E08				
95801-06050-07	F13		96100-62050-10	E13				
95801-08012-07	F21		96100-63020-00	E13				
95801-08014-07	F04		96140-60013-00	E08				
95801-08018-07	F22		96150-60060-10	E10				
95801-08035-00	E13		96150-62050-10-TW	E13				
95801-08035-07	F14		96150-63033-10	F13				
95801-08045-00	E13		96700-06022-49	F02				
95801-08065-07	F23		96700-06022-49	F04				
95801-10040-07	F14		96700-08020-00	F08				
95801-10045-07	F08		98000					
95801-10075-07	F13		98059-58817-00	E02				
95801-12090-07	F23							
95801-J01-000	F04							
96000								
96001-06010-00	E01							
96001-06012-00	E10							
96001-06012-02	E05							

96001-06012-07	F18							
96001-06012-08	E06							
96001-06012-08	E07							
96001-06012-08	E14							
96001-06014-08	E05							
96001-06016-02	E02							
96001-06016-02	E05							
96001-06016-07	F10							
96001-06016-07	F13							
96001-06018-02	E07							
96001-06022-02	E01							
96001-06022-02	E06							
96001-06022-07	E10							
96001-06025-00	E10							
96001-06032-02	E01							
96001-06035-00	E08							